Instructions-Parts

Pro Xp™ Auto AA Spray Gun

333011E
EN

Automatic Electrostatic Gun for use in Class I, Div. I Hazardous Locations using Group D spray materials.

Automatic Electrostatic Gun for use in Group II, Zone 1 Explosive Atmosphere Locations using Group IIA spray materials.

For professional use only.

100 psi (0.7 MPa, 7 bar) Maximum Air Inlet Press
3000 psi (21 MPa, 210 bar) Maximum Working Fluid Pressure

Important Safety Instructions
Read all warnings and instructions in this manual and in related manuals. Save these instructions.

See page 2 for **Table of Contents** and page 3 for **List of Models**.

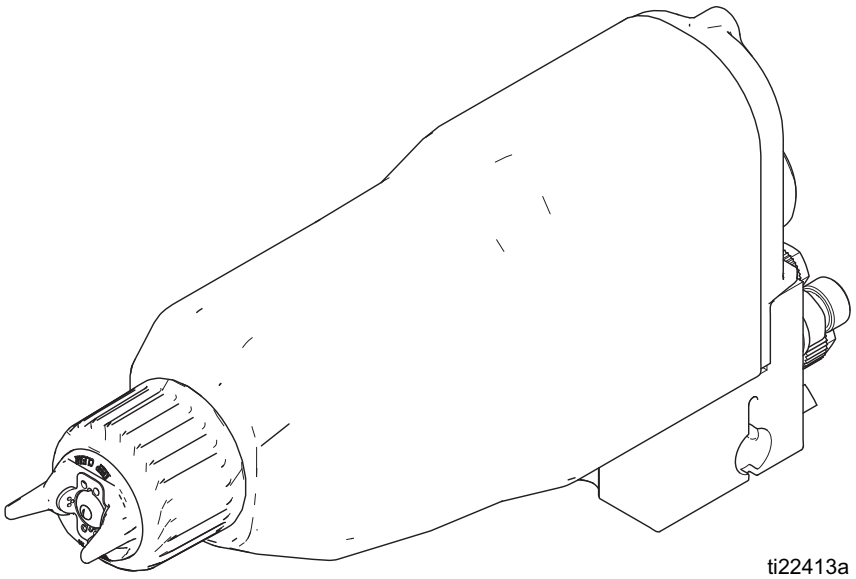

ti22413a

Table of Contents

Table of Contents 2
List of Models 3
Warnings 4
Introduction 6
How the Electrostatic AA Spray Gun Works 6
Operating the Spray Function 6
Operating the Electrostatics 6
Gun Features and Options 6
Smart Gun Features 6
System Overview 7
Typical System Installation 7
Gun Overview 8
Installation 9
Install the System 9
Warning Signs 9
Ventilate the Spray Booth 9
Install the Air Line Accessories 9
Install Fluid Line Accessories 9
Install the Gun 11
Install the Pro Xp Auto Control Module 11
Connect the Air and Fluid Lines 11
Manifold Connections 12
Fiber Optic Cable Connection 13
Grounding 14
Check Electrical Grounding 14
Check Fluid Resistivity 15
Check Fluid Viscosity 15
Install the Fabric Cover 15
Flush Before Using Equipment 15
Operation 16
Pressure Relief Procedure 16
Startup 16
Select a Spray Tip 16
Install the Spray Tip 17
Set the Atomization Fluid Pressure 17
Adjust the Electrostatics 18
Spraying 18
Triggering the Fluid Alone 18
Shutdown 18
Maintenance 19
Daily Care and Cleaning Checklist 19
Flushing 19
Clean Outside of Gun 20
Clean the Spray Gun 20
Check for Fluid Leakage 21
Electrical Tests 22
Test Gun Resistance 22
Test Power Supply Resistance 22
Test Barrel Resistance 23
Troubleshooting 24
Spray Pattern Troubleshooting 24
Gun Operation Troubleshooting 25
Electrical Troubleshooting 27
Repair 28
Prepare the Gun for Service 28
Remove the Gun from the Manifold 28
Install the Gun on the Manifold 29
Air Cap/Tip Guard, Spray Tip, and Fluid Seat Housing Replacement 29
Electrode Replacement 30
Fluid Tube Replacement 30
Fluid Filter Removal 31
Fluid Needle Replacement 31
Piston Repair 32
Adjust the Actuator Arm 32
Barrel Removal 33
Barrel Installation 33
Power Supply Removal and Replacement 33
Turbine Removal and Replacement 34
Parts 36
Standard Pro Xp Auto AA Gun Models 36
Smart Pro Xp Auto AA Gun Models 38
Air Cap Assembly 40
Turbine Assembly 41
Robot Mount Bracket Assembly 42
Accessories 44
Dimensions 46
Robot Mount Gun Dimensions 47
Spray Tip Selection Chart 52
AEM Fine Finish Spray Tips 52
AEF Fine Finish Pre-Orifice Spray Tips 53
Air Flow 54
Technical Data 55
Graco Pro Xp Warranty 56

List of Models

Part No.	kV	Standard Model	Smart Model	Bottom Manifold	Rear Manifold
HA1M10	85		✔		✔
HA1T10	85	✔			✔
HA2M10	85		✔	✔	
HA2T10	85	✔		✔	

Approvals

CE 0359

Ex II 2 G

0.24 mJ
FM14ATEX0081
EN 50050-1
Ta 0°C-50°C

FM C US APPROVED

Related Manuals

Manual No.	Description
332989	Instructions - Pro Xp Auto Control Module

Warnings

The following warnings are for the setup, use, grounding, maintenance, and repair of this equipment. The exclamation point symbol alerts you to a general warning and the hazard symbols refer to procedure-specific risks. When these symbols appear in the body of this manual or on warning labels, refer back to these Warnings. Product-specific hazard symbols and warnings not covered in this section may appear throughout the body of this manual where applicable.

⚠WARNING

FIRE, EXPLOSION, AND ELECTRIC SHOCK HAZARD

Flammable fumes, such as solvent and paint fumes, in work area can ignite or explode. To help prevent fire and explosion and electric shock:

- Electrostatic equipment must be used only by trained, qualified personnel who understand the requirements of this manual.
- Ground all equipment, personnel, object being sprayed, and conductive objects in or close to spray area. Resistance must not exceed 1 megohm. See **Grounding** instructions.
- Only use grounded Graco conductive air supply hoses.
- Do not use pail liners unless they are conductive and grounded.
- **Stop operation immediately** if static sparking occurs or you feel a shock**.** Do not use equipment until you identify and correct the problem.
- Check gun resistance, hose resistance, and electrical grounding daily.
- Use and clean equipment only in well ventilated area.
- Interlock the gun air supply to prevent operation unless ventilating fans are on.
- Use cleaning solvents with highest possible flash point when flushing or cleaning equipment.
- To clean the exterior of the equipment, cleaning solvents must have a flash point at least 5°C (9°F) above ambient temperature.
- Always turn the electrostatics off when flushing, cleaning or servicing equipment.
- Eliminate all ignition sources; such as pilot lights, cigarettes, portable electric lamps, and plastic drop cloths (potential static arc).
- Do not plug or unplug power cords or turn lights on or off when flammable fumes are present.
- Keep spray area free of debris, including solvent, rags and gasoline.
- Keep a working fire extinguisher in the work area.

SKIN INJECTION HAZARD

High-pressure fluid from gun, hose leaks, or ruptured components will pierce skin. This may look like just a cut, but it is a serious injury that can result in amputation. **Get immediate surgical treatment.**

- Do not spray without tip guard and trigger guard installed.
- Engage trigger lock when not spraying.
- Do not point gun at anyone or at any part of the body.
- Do not put your hand over the spray tip.
- Do not stop or deflect leaks with your hand, body, glove, or rag.
- Follow the **Pressure Relief Procedure** when you stop spraying and before cleaning, checking, or servicing equipment.
- Tighten all fluid connections before operating the equipment.
- Check hoses and couplings daily. Replace worn or damaged parts immediately.

⚠WARNING

PLASTIC PARTS CLEANING SOLVENT HAZARD

Many solvents can degrade plastic parts and cause them to fail, which could cause serious injury or property damage.

- Use only compatible water-based solvents to clean plastic structural or pressure-containing parts.
- See **Technical Data** in this and all other equipment instruction manuals. Read fluid and solvent manufacturer's MSDSs and recommendations.

TOXIC FLUID OR FUMES HAZARD

Toxic fluids or fumes can cause serious injury or death if splashed in the eyes or on skin, inhaled, or swallowed.

- Read MSDSs to know the specific hazards of the fluids you are using.
- Store hazardous fluid in approved containers, and dispose of it according to applicable guidelines.

PERSONAL PROTECTIVE EQUIPMENT

Wear appropriate protective equipment when in the work area to help prevent serious injury, including eye injury, hearing loss, inhalation of toxic fumes, and burns. This protective equipment includes but is not limited to:

- Protective eye wear, and hearing protection.
- Respirators, protective clothing, and gloves as recommended by the fluid and solvent manufacturer

EQUIPMENT MISUSE HAZARD

Misuse can cause death or serious injury.

- Do not operate the unit when fatigued or under the influence of drugs or alcohol.
- Do not exceed the maximum working pressure or temperature rating of the lowest rated system component. See **Technical Data** in all equipment manuals.
- Use fluids and solvents that are compatible with equipment wetted parts. See Technical Data in all equipment manuals. Read fluid and solvent manufacturer's warnings. For complete information about your material, request MSDS from distributor or retailer.
- Do not leave the work area while equipment is energized or under pressure.
- Turn off all equipment and follow the **Pressure Relief Procedure** when equipment is not in use.
- Check equipment daily. Repair or replace worn or damaged parts immediately with genuine manufacturer's replacement parts only.
- Do not alter or modify equipment. Alterations or modifications may void agency approvals and create safety hazards.
- Make sure all equipment is rated and approved for the environment in which you are using it.
- Use equipment only for its intended purpose. Call your distributor for information.
- Route hoses and cables away from traffic areas, sharp edges, moving parts, and hot surfaces.
- Do not kink or over bend hoses or use hoses to pull equipment.
- Keep children and animals away from work area.
- Comply with all applicable safety regulations.

Introduction

How the Electrostatic AA Spray Gun Works

This is not an air spray gun. To help prevent serious injury from pressurized fluid, such as skin injection, and splashing fluid, read and follow the Skin Injection Hazard Warnings on page 4.

The electrostatic air-assisted spray gun combines airless and air spraying concepts. The spray tip shapes the fluid into a fan pattern, as does a conventional airless spray tip. Air from the air cap further atomizes the fluid and completes the atomization of the fluid tails to produce a uniform pattern.

The high working fluid pressure of this gun provides the power needed to atomize higher solid materials.

Operating the Spray Function

Applying a minimum of 60 psi (0.42 MPa, 4.2 bar) air pressure to the gun manifold's cylinder air fitting (CYL) will retract the gun piston, which opens the air valves and a short time later opens the fluid needle. This provides the proper air lead and lag when triggering the gun. A spring returns the piston when the cylinder air is shut off.

Operating the Electrostatics

To operate the electrostatics, apply air pressure to the gun manifold's turbine air fitting (TA) through a Graco Grounded Turbine Air Hose. The air enters the manifold and is directed to the inlet of the power supply turbine. The air spins the turbine, which then provides electrical power to the internal high voltage power supply. The fluid is charged by the spray gun electrode. The charged fluid is attracted to the nearest grounded object, wrapping around and evenly coating all surfaces.

Gun Features and Options

- The gun's full voltage setting is 85kV.
- The gun is designed for use with a reciprocator, and can be mounted directly on a 1/2 in. (13 mm) rod. With additional brackets, the gun can be mounted for robotic applications.
- The gun's quick-disconnect design enables its removal without disconnecting air lines to the gun.
- Gun functions are activated from a separate controller that sends the appropriate signal to the actuating solenoids.

Smart Gun Features

Smart gun models with the Pro Xp Auto Control Module have the ability to:

- Display the spraying voltage and current
- Change the gun voltage setting
- Display the gun turbine speed
- Store spray profiles
- Communicate equipment faults to a PLC
- Display and set maintenance totalizers
- Use a PLC to select a spray profile

See the Pro Xp Auto Control Module manual 332989 for more information.

System Overview

Typical System Installation

FIGURE 1 shows a typical electrostatic air spray system. It is not an actual system design. For assistance in designing a system to suit your particular needs, contact your Graco distributor.

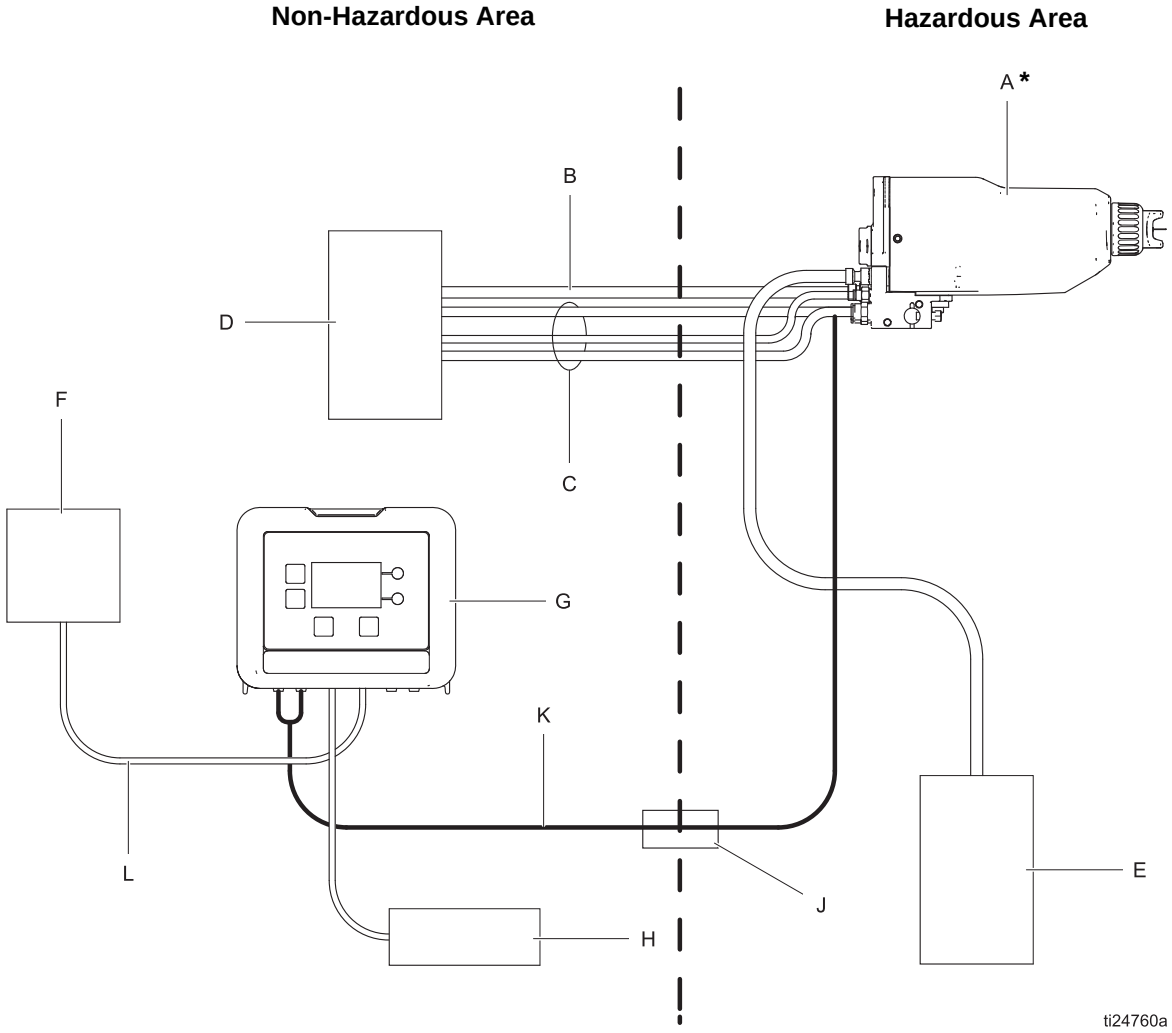

FIG. 1 Typical System Installation

A	Gun
B	Graco Grounded Turbine Air Hose
C	Atomizer, Fan, and Cylinder Air
D	Air Supply and controls
E	Fluid Supply and controls
* Approved for hazardous locations	

Smart System Components	
F	Programmable Logic Controller (PLC)
G	Pro Xp Auto Control Module
H	Power Supply (24 Volt)
J	Bulkhead (optional)
K	F/O Cable
L	I/O Cable

Gun Overview

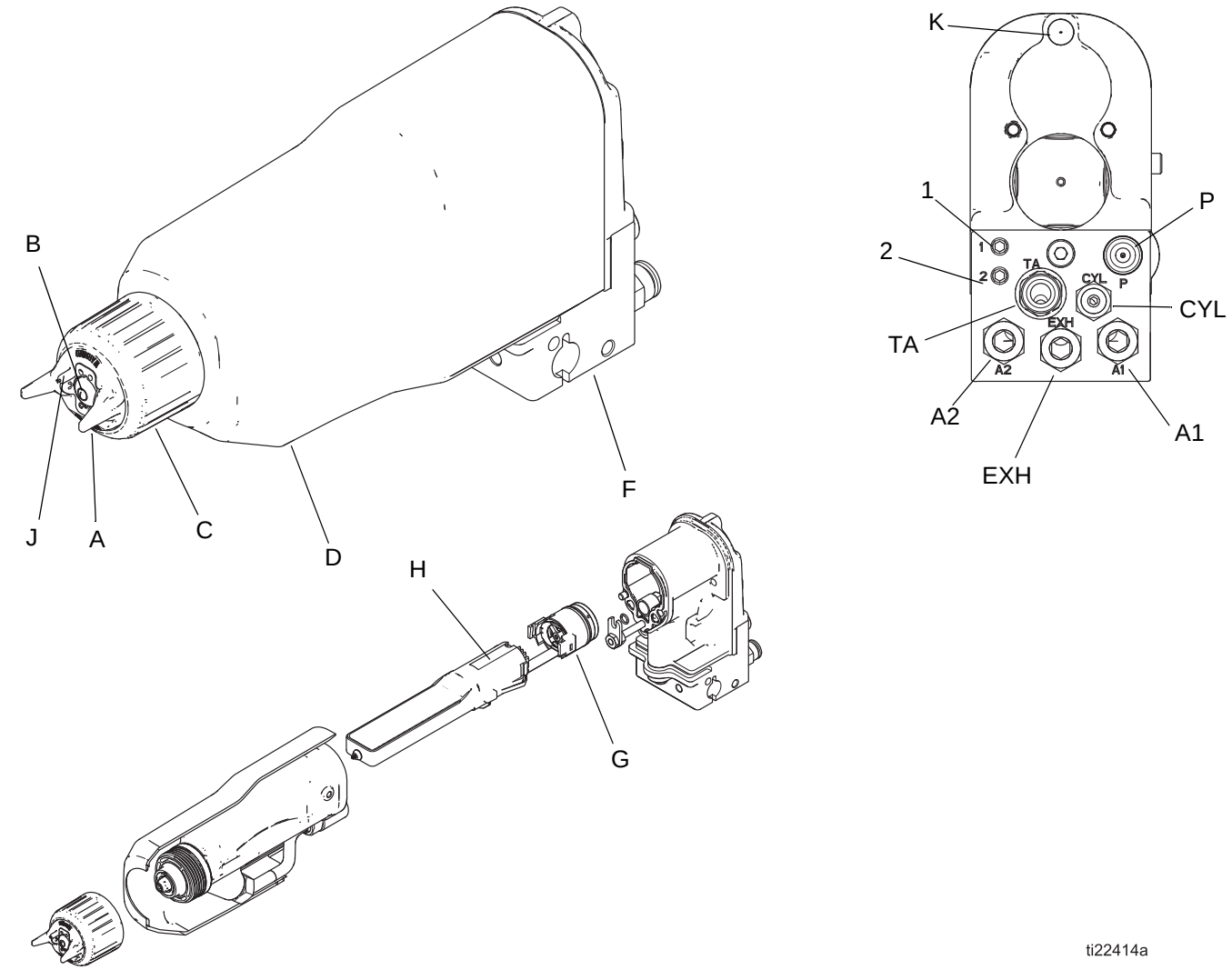

FIG. 2 Gun Overview

Key

A	Air Cap
B	Spray Tip
C	Retaining Ring
D	Shroud
F	Manifold
G	Turbine
H	Power Supply
J	Electrode

Manifold Fittings and Indicators

A1	Atomization Air Inlet Fitting
A2	Fan Air Inlet Fitting
CYL	Cylinder Air Inlet Fitting
1	Fiber Optic Fitting Transmit (Operational on Smart models only)
2	Fiber Optic Fitting Receive (Operational on Smart models only)
K	ES Indicator Light (standard models only)
P	Fluid Supply Inlet Fitting
TA	Turbine Air Inlet Fitting (to drive turbine)
EXH	Exhaust Outlet Fitting

Installation

Install the System

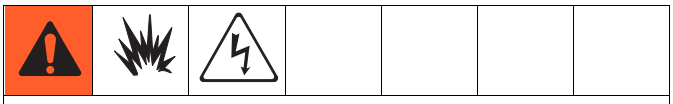

Installing and servicing this equipment requires access to parts which may cause electric shock or other serious injury if work is not performed properly.

- Do not install or service this equipment unless you are trained and qualified.
- Be sure your installation complies with local, state, and national codes for the installation of electrical apparatus in a Class I, Div. I, hazardous location or a Group II, Zone I explosive atmosphere location.
- Comply with all applicable local, state, and national fire, electrical, and other safety regulations.

Warning Signs

Mount warning signs in the spray area where they can easily be seen and read by all operators. An English Warning Sign is provided with the gun.

Ventilate the Spray Booth

Provide fresh air ventilation to reduce the risk of fire or explosion caused by the buildup of flammable or toxic vapors when spraying, flushing, or cleaning the gun. Do not operate the gun unless ventilation fans are operating.

Electrically interlock the gun turbine air supply (B) with the ventilators to prevent gun operation without ventilating fans operating. Check and follow all local, state, and national codes regarding air exhaust velocity requirements.

NOTE: High velocity air exhaust will decrease the operating efficiency of the electrostatic system. Air exhaust velocity of 100 ft/min (31 linear meters/minute) should be sufficient.

Install the Air Line Accessories

See FIGURE 3.

1. Install a bleed-type master air valve (L) on the main air line (W) to shut off all air to the gun.
2. Install an air line filter/water separator on the gun air line to ensure a dry, clean air supply to the gun. Dirt and moisture can ruin the appearance of your finished workpiece and can cause the gun to malfunction.
3. Install a bleed-type air pressure regulator (M) on each of the air supply lines (B, C, D, E) to control air pressure to the gun.

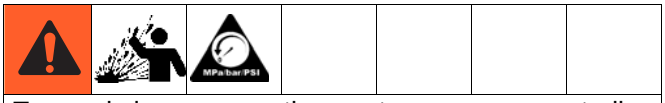

Trapped air can cause the gun to spray unexpectedly, which can result in serious injury, including splashing fluid in the eyes or on the skin. The solenoid valves (K) must have a quick exhaust port so trapped air will be relieved between the valve and gun when the solenoids are shut off.

4. Install a solenoid valve (K) on the cylinder air line (E) to actuate the gun. The solenoid valve must have a quick exhaust port.
5. Install a solenoid valve (K) to actuate the turbine.

Install Fluid Line Accessories

1. Install a fluid filter and drain valve at the pump outlet. Filtering the fluid will help remove coarse particles and sediment that could clog the spray tip. The fluid drain valve is required in your system to assist in relieving fluid pressure in the displacement pump, hose, and gun. Triggering the gun to relieve pressure may not be sufficient. Install a drain valve close to the pump's fluid outlet.

NOTE: The gun includes an inline fluid filter for additional filtration.

2. Install a fluid regulator on the fluid line to control fluid pressure to the gun.

FIGURE 3 shows a typical electrostatic spray system. It is not an actual system design. For assistance in designing a system to suit your particular needs, contact your Graco distributor.

The turbine air (TA) must be electrically interlocked with the spray booth ventilation fans to prevent the power supply from operating without ventilating fans on.

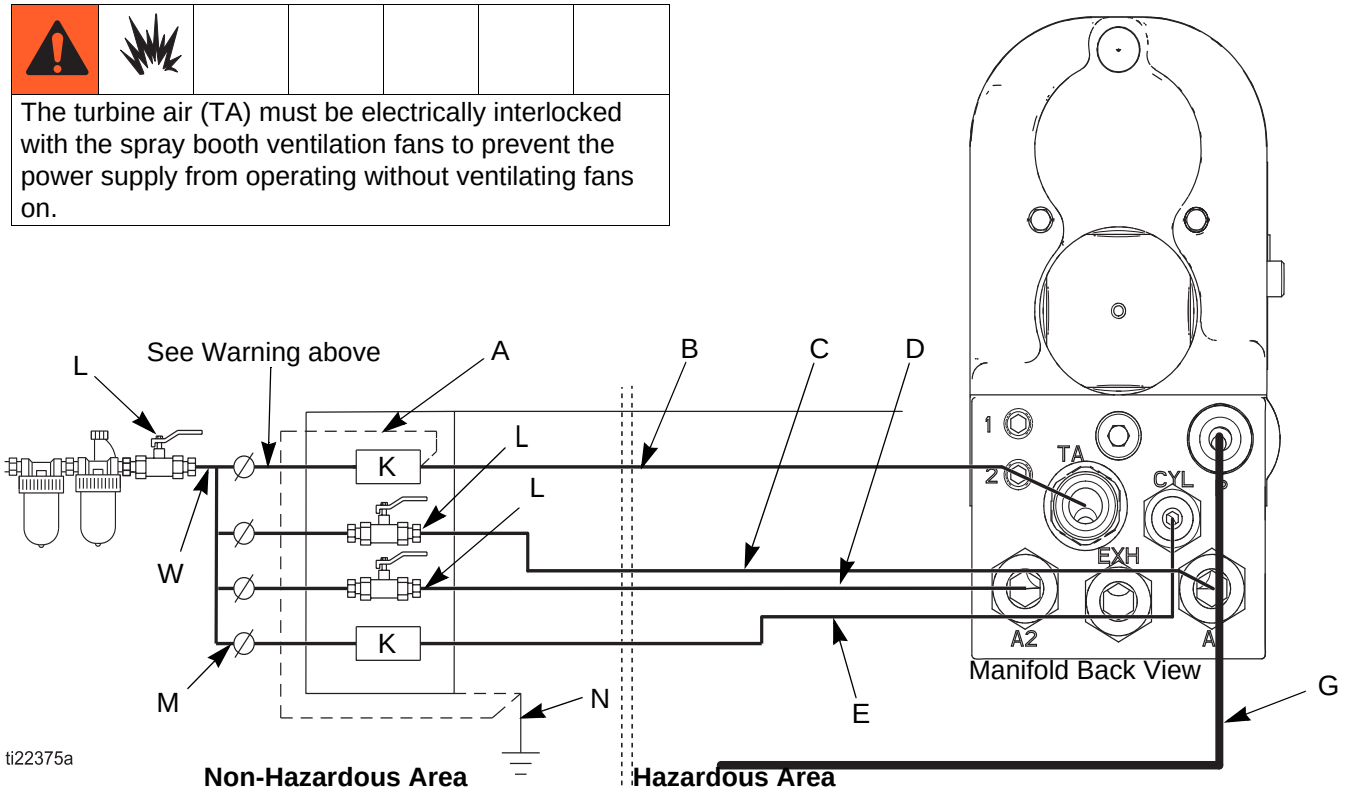

FIG. 3 Typical Installation

Key to FIGURE 3

A	Air Hose Ground Wire
B	Graco Grounded Turbine Air Hose (TA)
C	Atomizing Air Hose, 5/16 in. (8 mm) OD (A1)
D	Fan Air Hose, 5/16 in. (8 mm) OD (A2)
E	Cylinder Air Hose, 5/32 in. (4 mm) OD (CYL)
G	High Pressure Fluid Supply Hose to 1/4-18 npsm gun fluid inlet (P)

K	Solenoid Valve, requires quick exhaust port
L	Bleed-Type Master Air Valve
M	Air Pressure Regulator
N	True Earth Ground
W	Main Air Line

Install the Gun

1. Loosen the manifold's two set screws (29) and slide the manifold (20) onto a 1/2 in. (13 mm) mounting rod.

2. Position the gun and tighten the two set screws.

NOTE: For added positioning reliability, insert a 1/8 in. (3 mm) locating pin into the slot (NN) in the bracket and through a hole in the rod. See the detail in FIGURE 4.

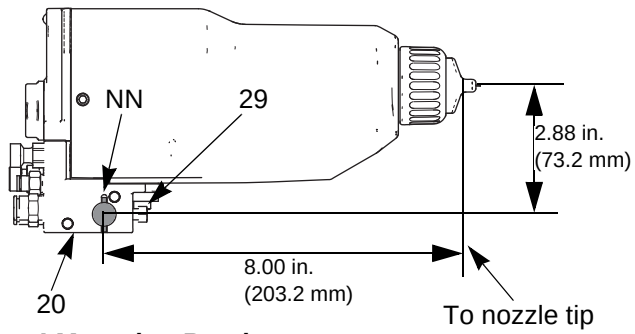

FIG. 4 Mounting Bracket

Install the Pro Xp Auto Control Module

The Pro Xp Auto Control Module is required for use with smart models. To install a Pro Xp Auto Control Module, see the module instruction manual 332989.

Connect the Air and Fluid Lines

FIGURE 3 shows a schematic of air and fluid line connections, and FIGURE 5 shows the manifold connections. Connect the air and fluid lines as instructed below.

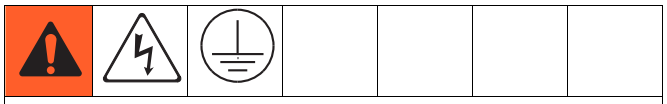

To reduce the risk of electric shock, the turbine air supply hose must be electrically connected to a true earth ground. **Use only Graco Grounded Turbine Air Hose.**

1. Connect the Graco Grounded Turbine Air Hose (B) to the gun's turbine air inlet (TA) and connect the hose ground wire (A) to a true earth ground (N). The gun turbine air inlet fitting has left-hand threads to prevent connecting another type of air hose to the turbine air inlet.

2. Check the electrical grounding of the gun as instructed on page 14.

3. Before connecting the high pressure fluid hose (P), blow it out with air and flush it with solvent. Use solvent which is compatible with the fluid to be sprayed.

Manifold Connections

Rear Inlet

Bottom Inlet

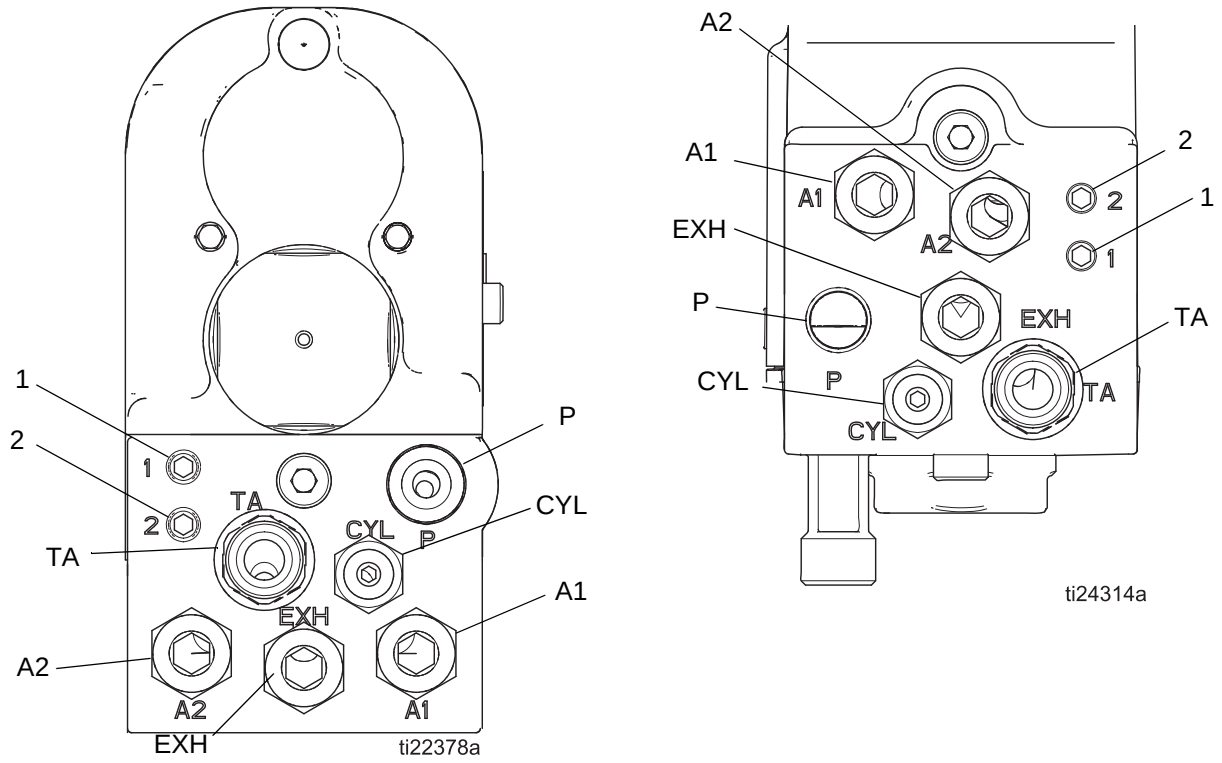

FIG. 5 Manifold Connections

A1	**Atomization Air Inlet Fitting** Connect a 5/16 in. (8mm) OD tube between this fitting and the air supply.
A2	**Fan Air Inlet Fitting** Connect a 5/16 in. (8 mm) OD tube between this fitting and the air supply.
CYL	**Cylinder Air Inlet Fitting** Connect a 5/32 in. (4 mm) OD tube between this fitting and the solenoid. For quicker response, use the shortest hose length possible.
1	**Fiber Optic Fitting Transmit (Operational on Smart models only)** Connect the Graco Fiber Optic cable (see page 13).
2	**Fiber Optic Fitting Receive (Operational on Smart models only)** Connect the Graco Fiber Optic cable (see page 13).
P	**Fluid Supply Inlet Fitting** Connect a 1/4 npsm swivel fitting between this fitting and the fluid supply.
TA	**Turbine Air Inlet Fitting** Connect the Graco Grounded Turbine Air Hose between this fitting (left-hand thread) and the solenoid. Connect the air hose ground wire to a true earth ground.
EXH	**Exhaust** Connect an exhaust tube to route the turbine exhaust air. Fitting is for a 5/16 in OD tube.

Fiber Optic Cable Connection

(Operational on Smart models only)

NOTE: Only use the supplied fiber optic cable.

The fiber optic cable allows the gun to communicate with the Pro Xp Auto control module.

For a 1 Gun System

1. Connect Port 1 of the gun 1 manifold to Port 1 of the Control Module.
2. Connect Port 2 of the gun 1 manifold to Port 2 of the Control Module.

For a 2 Gun System

1. Connect Port 1 of the gun 2 manifold to Port 5 of the Control Module.
2. Connect Port 2 of the gun 2 manifold to Port 6 of the Control Module.

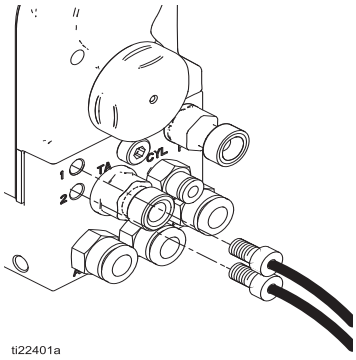

FIG. 6 . Making Fiber Optic Connections

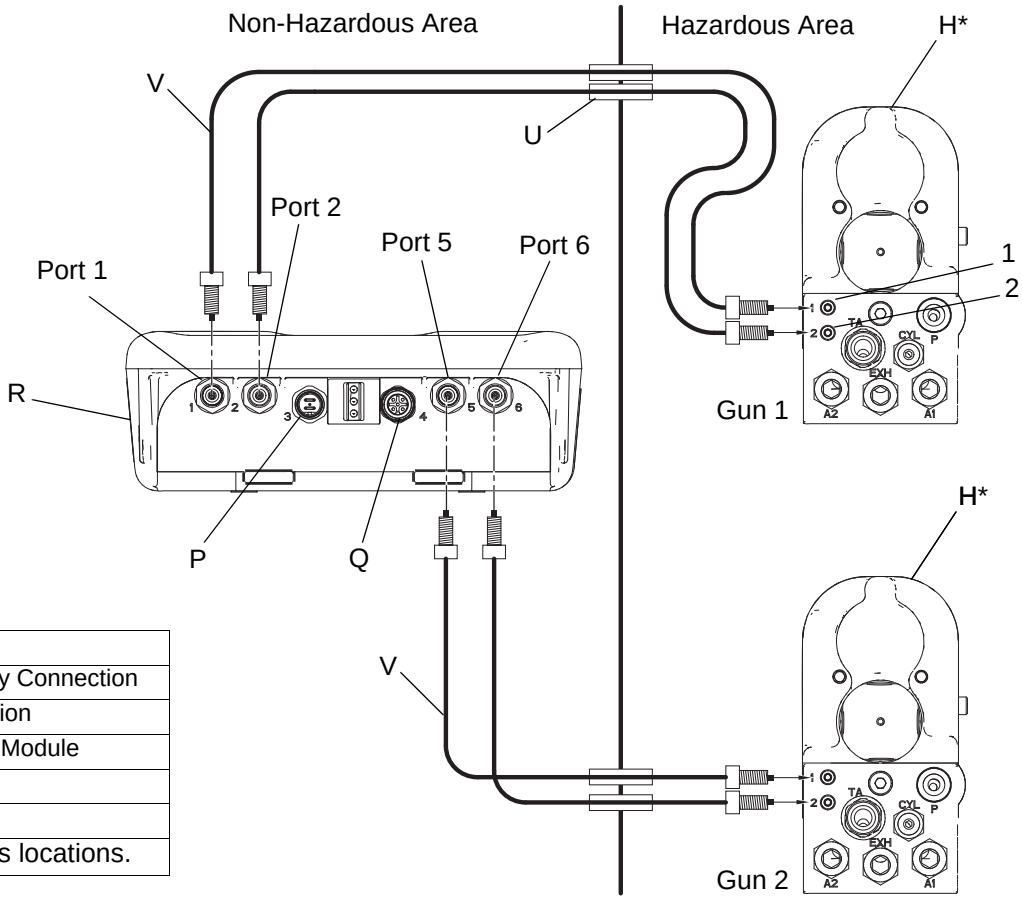

Key for FIGURE 7

H	Pro Xp Auto AA Gun
P	24 Volt Power Supply Connection
Q	Remote I/O Connection
R	Pro Xp Auto Control Module
U	Bulkhead (optional)
V	Fiber Optic Cable
* Approved for hazardous locations.	

FIG. 7 . Fiber Optic Schematic

Grounding

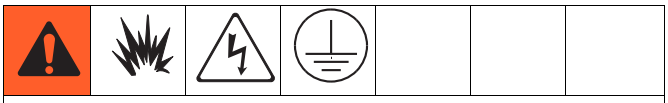

When operating the electrostatic gun, any ungrounded objects in the spray area (people, containers, tools, etc.) can become electrically charged. Improper grounding can result in static sparking, which can cause a fire, explosion, or electric shock. Ground all equipment, personnel, object being sprayed, and conductive objects in or close to the spray area. Resistance must not exceed 1 megohm. Follow the grounding instructions below.

The following are minimum grounding requirements for a basic electrostatic system. Your system may include other equipment or objects which must be grounded. Check your local electrical code for detailed grounding instructions. Your system must be connected to a true earth ground.

- ***Pump:*** ground the pump by connecting a ground wire and clamp as described in your separate pump instruction manual.
- ***Electrostatic Air Assisted Spray Gun:*** ground the gun by connecting the Graco Grounded Turbine Air Hose to the turbine air inlet and connecting the air hose ground wire to a true earth ground. See **Check Electrical Grounding,** page 14.
- ***Air compressors and hydraulic power supplies:*** ground the equipment according to the manufacturer's recommendations.
- ***All air and fluid lines*** must be properly grounded.
- ***All electrical cables*** must be properly grounded.
- ***All persons entering the spray area:*** shoes must have conductive soles, such as leather, or personal grounding straps must be worn. Do not wear shoes with non-conductive soles such as rubber or plastic.
- ***Object being sprayed:*** keep the workpiece hangers clean and grounded at all times. Resistance must not exceed 1 megohm.
- ***The floor of the spray area:*** must be electrically conductive and grounded. Do not cover the floor with cardboard or any non-conductive material which would interrupt grounding continuity.
- ***Flammable liquids in the spray area:*** must be kept in approved, grounded containers. Do not use plastic containers. Do not store more than the quantity needed for one shift.
- *All electrically conductive objects or devices in the spray area* including fluid containers and wash cans, must be properly grounded.
- ***Fluid and waste containers:*** ground all fluid and waste containers in the spray area. Do not use pail liners unless they are conductive and grounded. When flushing the spray gun, the container used to catch the excess fluid must be electrically conductive and grounded.
- ***All solvent pails:*** use only approved, grounded metal containers, which are conductive. Do not use plastic containers. Use only non-flammable solvents. Do not store more than the quantity needed for one shift.

Check Electrical Grounding

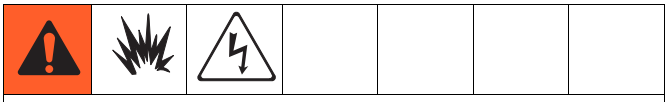

Megohmmeter Part No. 241079 (AA-see FIGURE 8) is not approved for use in a hazardous area. To reduce the risk of sparking, do not use the Megohmmeter to check electrical grounding unless:

The gun has been removed from the hazardous area
Or
All spraying devices in the hazardous area are turned off, ventilation fans in the hazardous area are operating, and there are no flammable vapors in the area (such as open solvent containers or fumes from spraying).

Failure to follow this warning could cause fire, explosion, and electric shock and result in serious injury and property damage.

Graco Part No. 241079 Megohmmeter is available as an accessory to check that the gun is properly grounded.

1. Have a qualified electrician check the electrical grounding continuity of the spray gun and turbine air hose.
2. Make sure the turbine air hose (B) is connected and the hose ground wire is connected to a true earth ground (N).
3. Turn off the air and fluid supply to the gun. The fluid hose must not have any fluid in it.
4. Measure the resistance between the turbine air inlet fitting (TA) and a true earth ground (N).
   a. *If using a black or gray turbine air hose,* use a Megohmmeter to measure the resistance. Use

an applied voltage of 500 minimum to 1000 volts maximum. The resistance should not exceed 1 megohm.

b. *If using a red turbine air hose,* use an ohmmeter to measure the resistance. The resistance should not exceed 100 ohms.

5. If the resistance is greater than the maximum reading specified above for your hose, check the tightness of the ground connections and be sure the turbine air hose ground wire is connected to a true earth ground. If the resistance is still too high, replace the turbine air hose.

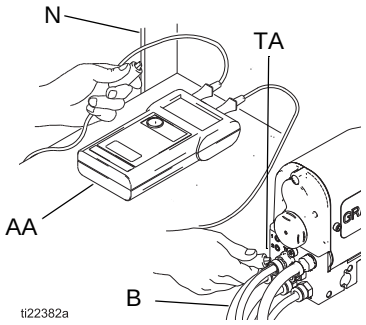

FIG. 8 Check Gun Grounding

Check Fluid Resistivity

Check the fluid resistivity in a non-hazardous area only. Resistance Meter 722886 and Probe 722860 are not approved for use in a hazardous area.

Failure to follow this warning could cause fire, explosion, and electric shock and result in serious injury and property damage.

Graco Part No. 722886 Resistance Meter and 722860 Probe are available as accessories to check that the resistivity of the fluid being sprayed meets the requirements of an electrostatic air spray system.

Follow the instructions included with the meter and probe. Readings of 25 megohms-cm and above provide the best electrostatic results.

Megohms-cm			
1-5	5-25	25-200	200-2000
Test electrostatic performance	Good electrostatic results	Best electrostatic results	Good electrostatic results

Check Fluid Viscosity

To check fluid viscosity you will need:

- a viscosity cup
- a stopwatch

1. Completely submerge the viscosity cup in the fluid. Lift the cup out quickly, starting the stopwatch as soon as the cup is completely removed.
2. Watch the stream of fluid coming from the bottom of the cup. As soon as there is a break in the stream, shut off the stopwatch.
3. Record the fluid type, elapsed time, and size of the viscosity cup.
4. Compare to the chart supplied by viscosity cup manufacturer to determine your fluid viscosity.
5. If the viscosity is too high or too low, contact the material supplier. Adjust as necessary.

Install the Fabric Cover

See FIGURE 9.

1. Install a fabric cover (XX) over the front of the gun and slide it back to cover the exposed tubing and hoses at the back of the manifold.
2. Route the exhaust tube (YY) outside the cover. This enables you to monitor the exhaust tube for the presence of any paint or solvent. See **Check for Fluid Leakage** on page 21. Strap down the exhaust tube to prevent it from moving around.

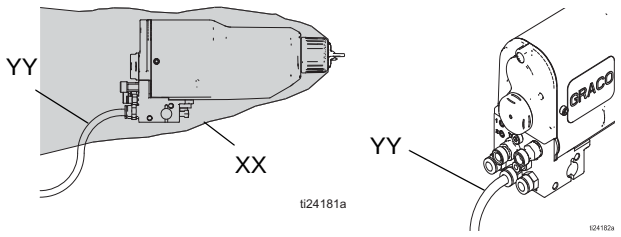

FIG. 9 . Fabric Cover

Flush Before Using Equipment

The equipment was tested in fluid at the factory. To avoid contaminating your fluid, flush the equipment with a compatible solvent before using the equipment. See **Flushing**, page 19.

Operation

Pressure Relief Procedure

Follow the Pressure Relief Procedure whenever you see this symbol.

This equipment stays pressurized until pressure is manually relieved. To help prevent serious injury from pressurized fluid, such as skin injection, splashing fluid and moving parts, follow the Pressure Relief Procedure when you stop spraying and before cleaning, checking, or servicing the equipment.

1. Turn off all the air to the spray gun except the cylinder air, which triggers the gun. If an air pilot fluid regulator is used in the system, the air pressure is needed at the regulator air inlet.
2. Turn off the fluid supply to the gun.
3. Trigger the gun into a grounded metal waste container to relieve the fluid pressure.
4. If an air pilot fluid regulator is used, turn off the air pressure at the regulator air inlet.
5. Relieve fluid pressure in the fluid supply equipment as instructed in its instruction manual.
6. Open the pump drain valve and all other drain valves in the system, having a waste container ready to catch the drainage. Triggering the gun to relieve pressure may not be sufficient. Leave the drain valve open until you are ready to spray again
7. Close the bleed-type master air valve on the main air supply line to shut off the air. Leave the valve closed until you are ready to spray again.
8. If you suspect that the spray tip or hose is still clogged or that pressure is not fully relieved after following the steps above, very slowly loosen the hose end coupling and relieve pressure gradually, then loosen completely. Now clear the tip or hose obstruction.

Startup

Check the following list daily, before starting to operate the system, to help ensure you of safe, efficient operation.

- ☐ All operators are properly trained to safely operate an automatic electrostatic air-assisted spray system as instructed in this manual.
- ☐ All operators are trained in the **Pressure Relief Procedure** on page 16.
- ☐ The warning sign provided with the gun is mounted in the spray area where it can be easily seen and read by all operators.
- ☐ The system is thoroughly grounded and the operator and all persons entering the spray area are properly grounded. See **Grounding** on page 14.
- ☐ The condition of the gun's electrical components has been checked as instructed in **Electrical Tests** on page 22.
- ☐ Ventilation fans are operating properly.
- ☐ Workpiece hangers are clean and grounded.
- ☐ All debris, including flammable fluids and rags, is removed from the spray area.
- ☐ All flammable fluids in the spray booth are in approved, grounded containers.
- ☐ All conductive objects in the spray area are electrically grounded and the floor of the spray area is electrically conductive and grounded.
- ☐ The manifold exhaust tubes have been checked for the presence of any fluid as instructed in **Check for Fluid Leakage** on page 21.

Select a Spray Tip

The fluid output and pattern width depend on the size of the spray tip, the fluid viscosity, and the fluid pressure. Use the , page 51, as a guide for selecting the appropriate spray tip for your application.

Install the Spray Tip

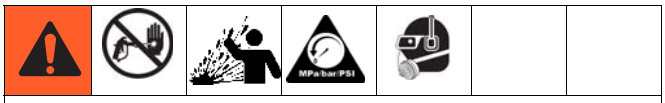

To reduce the risk of skin injection and splashing, follow the **Pressure Relief Procedure** before removing or installing the spray tip or air cap/tip guard.

1. Relieve the pressure. Follow **Pressure Relief Procedure**, page 16.
2. Align the spray tip tab with the groove in the air cap. Install the tip.

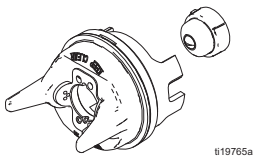

FIG. 10 Spray Tip Alignment

3. Install the air cap and retaining ring. Orientate the air cap and tighten the retaining ring securely. Be careful not to damage the electrode.

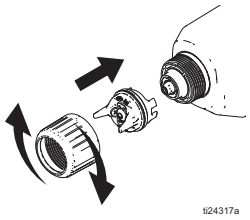

FIG. 11 Install Air Cap Assembly

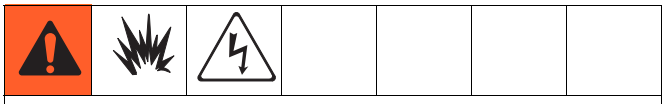

To reduce the risk of fire, explosion, or electric shock, never operate the gun with a damaged electrode.

Set the Atomization Fluid Pressure

See FIGURE 5.

Atomization fluid pressure will vary based on the viscosity of the fluid, flow rate desired, and other system characteristics.

1. Turn off the turbine air (TA), atomization air (A1), and fan air (A2).
2. Start the pump. Set the fluid regulator to 400 psi (2.8 MPa, 28 bar).
3. With the turbine air (TA), atomization air (A1), and fan air (A2) turned off, spray a test pattern, holding the gun 12 in. (305 mm) from the surface. Examine the particle size. Do not be concerned about the presence of tails; they will be removed in step 6.
4. Increase the fluid pressure in small increments. Spray another pattern and compare the particle size. Smaller particle size indicates improved atomization.

To reduce the risk of injury, never exceed the maximum working pressure on the lowest rated system component. Maximum working pressure of this equipment is **3000 psi (21 MPa, 210 bar)**.

5. Continue to increase the fluid pressure and spray test patterns. Do not exceed 3000 psi (21 MPa, 210 bar) fluid pressure. When the particle size remains constant, the fluid is being atomized at the lowest possible fluid pressure.

   For improved atomization at lower fluid flow rates, change to a smaller tip orifice size.

6. Turn on the atomization air (A1) and adjust the air pressure until the tails disappear.

   See **Spray Pattern Troubleshooting** on page 24 to correct spray pattern problems.

7. The pattern width can also be reduced by applying fan air pressure (A2).

FIG. 12 Eliminating Tails

Adjust the Electrostatics

1. Turn on the turbine air (TA) and adjust the air pressure per the settings in Table 1 . Set the proper pressure at the turbine air hose inlet *when air is flowing*.

Table 1. Approximate Dynamic Turbine Air Pressures

Turbine Air Hose Length ft (m)	Air pressure at turbine air hose inlet for full voltage psi (bar, MPa)
15 (4.6)	54 (3.8, 0.38)
25 (7.6)	55 (3.85, 0.38)
36 (11)	56 (3.9, 0.39)
50 (15.3)	57 (4.0, 0.40)
75 (22.9)	59 (4.1, 0.41)
100 (30.5)	61 (4.3, 0.43)

2. Check the turbine speed of the gun by checking the indicator light on the standard gun body or for the smart gun check the actual turbine speed on the Pro Xp Auto Control Module. See the following table. Adjust the air pressure as necessary to keep the indicator light green or the values within 400-750 Hz.

NOTE: Smart models display values not color indicator lights.

Table 2. Indicator Colors/Values

Indicator Color	Description
Green 400-750 Hz	When spraying, the indicator should remain green, indicating sufficient air pressure to the turbine.
Amber <400	If the indicator changes to amber after 1 second, the air pressure is too low. Increase air pressure until the indicator is green.
Red >750	If the indicator changes to red after 1 second, the air pressure is too high. Decrease air pressure until the indicator is green. Excessive turbine speed can shorten the bearing life and will not increase the voltage output.

Check the voltage output of the gun using a high voltage probe and meter or by reading the Pro Xp Auto Control Module.

NOTE: The gun's normal high voltage reading is 60-70 kV. If a ball end high voltage measurement probe is used, the gun voltage will rise to about 85 kV. This will happen with all resistive electrostatic guns.

See **Electrical Troubleshooting** on page 27 to correct voltage problems.

Spraying

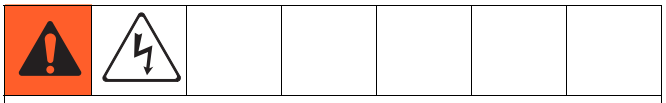

To reduce the risk of electric shock, do not touch the gun electrode or come within 4 in. (10 cm) of the nozzle during gun operation.

1. Apply a minimum of 60 psi (4.2 bar, 0.42 MPa) air pressure to the cylinder air fitting (CYL) to activate the on/off sequence of atomization air (A1), fan air (A2), and fluid (P). See FIGURE 2.
2. Turn the gun functions on and off by using the air solenoid valves on the cylinder (CYL) and turbine (TA) air supply lines.
3. To change a smart model to a lower voltage setting, see the Pro Xp Auto Control Module manual 332989.

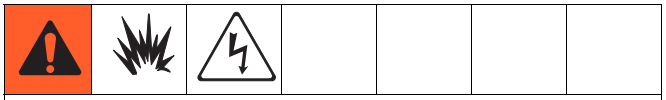

If any fluid leakage from the gun is detected, stop spraying immediately. Fluid leakage into the gun shroud could cause fire or explosion and result in serious injury and property damage. See **Check for Fluid Leakage** on page 21.

Triggering the Fluid Alone

1. Shut off and relieve the air pressure to the atomization (A1) and fan (A2) air lines, using the bleed-type air shutoff valves.
2. Apply 60 psi (4.2 bar, 0.42 MPa) air pressure to the cylinder air fitting (CYL) to trigger the fluid.

Shutdown

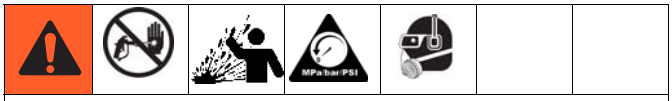

To reduce the risk of an injury, follow the **Pressure Relief Procedure** when you stop spraying and whenever you are instructed to relieve the pressure.

1. Flush the gun, see **Flushing**, page 19.
2. Follow the **Pressure Relief Procedure**, page 16.
3. Clean the equipment. See **Maintenance** on page 19.

Maintenance

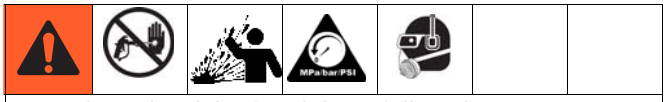

To reduce the risk of an injury, follow the **Pressure Relief Procedure** before doing any maintenance on the gun or system.

Daily Care and Cleaning Checklist

Check the following list daily upon completion of equipment usage.

- ☐ Flush the gun. See **Flushing**, page 19.
- ☐ Clean the fluid and air line filters.
- ☐ Clean the outside of the gun. See **Clean Outside of Gun**, page 20.
- ☐ Clean the air cap, spray tip, and tip guard daily, minimum. Some applications require more frequent cleaning. Replace the parts if they are damaged. See **Clean the Spray Gun**, page 20.
- ☐ Check the electrode and replace if broken or damaged. See **Electrode Replacement** on page 30.
- ☐ Check for fluid leakage from the gun and fluid hoses. See **Check for Fluid Leakage** on page 21. Tighten fittings or replace equipment as needed.
- ☐ **Check Electrical Grounding**, page 14.

Flushing

- Flush before changing fluids, before fluid can dry in the equipment, at the end of the day, before storing, and before repairing equipment.
- Flush at the lowest pressure possible. Check connectors for leaks and tighten as necessary.
- Flush with a fluid that is compatible with the fluid being dispensed and the equipment wetted parts.

To reduce the risk of fire and explosion, turn off the turbine air (TA) before flushing the gun and always ground equipment and waste container. To avoid static sparking and injury from splashing, always flush at lowest possible pressure.

NOTICE

Do not use methylene chloride as a flushing or cleaning solvent with this gun as it will damage nylon components.

1. Turn off the turbine air.
2. Switch the fluid supply to a compatible solvent.
3. Trigger the gun to flush the fluid passages clean.

Clean Outside of Gun

NOTICE

- Clean all parts with a non-conductive, compatible solvent. Conductive solvents can cause the gun to malfunction.
- Fluid in the air passages could cause the gun to malfunction and could draw current and reduce the electrostatic effect. Fluid in the power supply cavity can reduce the turbine life. Whenever possible, point the gun down when cleaning it. Do not use any cleaning method which could allow fluid into the gun air passages.

1. Turn off turbine air (TA).
2. Flush the gun. See **Flushing**, page 19
3. Follow the **Pressure Relief Procedure**, page 16.
4. Clean the outside of the gun with a compatible solvent. Use a soft cloth. Wring out excess fluid from cloth. Point the gun down to prevent solvent from entering the gun passages. Do not immerse the gun

Clean the Spray Gun

Equipment Needed

- soft bristle brush
- compatible solvent

Procedure

1. Be sure the turbine air (TA) is turned off.
2. Relieve the pressure.
3. Remove the retaining ring (24), air cap/tip guard (25), spray tip (3), and gun shroud (26). See page 29.
4. Dip the end of a soft bristle brush into compatible solvent. clean the front of the gun with the brush. Avoid getting any solvent into the air passages. Whenever possible, point the gun down when cleaning it. See FIGURE 13

   If it appears that there is paint inside the air passages, remove the gun from the line for servicing.

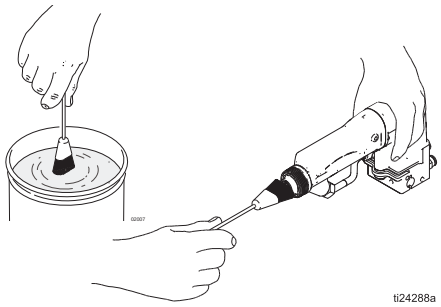

FIG. 13 Clean Front of Gun

5. Dampen a soft cloth with solvent and wring out the excess. Wipe the exterior of the gun and shroud clean. See FIGURE 14.

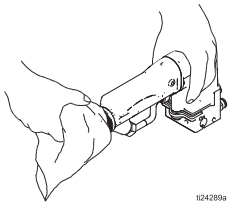

FIG. 14 Clean Gun Body

6. Remove the bottom fluid tube fitting (C) and fluid filter (20). See FIGURE 15. Clean the filter in compatible solvent.

NOTE: Use two wrenches to remove the fluid tube fitting (C).

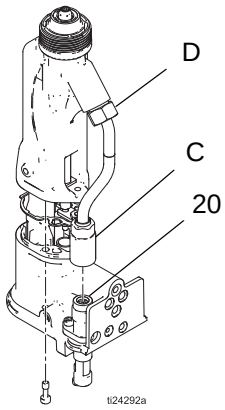

FIG. 15 Clean the Inline Fluid Filter

7. Reinstall the filter (20) and fitting (C). Do not over tighten the fitting, and make sure the top fitting (D) remains tight.

NOTE: Use two wrenches to install the fluid tube fitting (C).

8. Clean the retaining ring (24), air cap/tip guard assembly (25), and spray tip (3) with a soft brush daily, minimum. Replace any damaged parts. Be careful not to damage the electrode (25a).

NOTICE

Do not use metal tools to clean the air cap/tip guard or spray tip holes as this could scratch them, and make sure the electrode is not damaged. Scratches in the air cap or spray tip or a damaged electrode can distort the spray pattern.

9. Wipe off the parts with a dry cloth. Be careful not to damage the electrode.

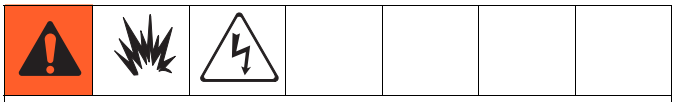

To reduce the risk of fire, explosion, or electric shock, never operate the gun with a damaged electrode.

10. Check the electrode (25a). Replace if damaged.
11. Install the spray tip, page 17.
12. Install the spray tip and air cap/tip guard, shroud, and retaining ring, page 17. Be sure the electrode (25a) is in place.
13. **Test Gun Resistance**, page 22.

Check for Fluid Leakage

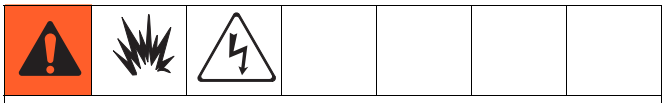

If any fluid leakage from the gun is detected, stop spraying immediately. Fluid leakage into the gun shroud could cause fire or explosion and result in serious injury and property damage.

During operation, periodically check all openings of the gun shroud (ZZ) for the presence of fluid. See FIGURE 12. Fluid in these areas indicates leakage into the shroud, which could be caused by leaks at the fluid tube connections or fluid packing leakage.

If fluid is seen in these areas, stop spraying immediately. Relieve the pressure, then remove the gun for repair.

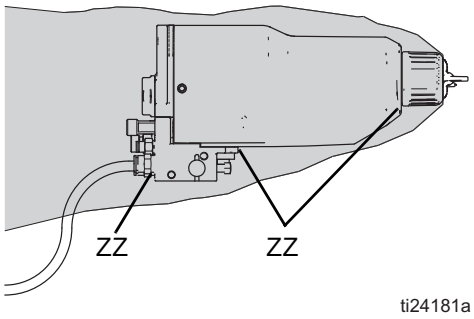

FIG. 16 Check for Fluid Leakage

Electrical Tests

Electrical components inside the gun affect performance and safety. The following procedures test the condition of the power supply (7) and electrode (25a), and electrical continuity between components.

NOTICE

The barrel resistor cartridge is part of the barrel and is not replaceable. To avoid destroying the gun barrel, do not attempt to remove the barrel resistor.

Use Megohmmeter Part No. 241079 (AA) and an applied voltage of 500 V. Connect the leads as shown.

Megohmmeter Part No. 241079 (AA-see FIGURE 17) is not approved for use in a hazardous area. To reduce the risk of sparking, do not use the Megohmmeter to check electrical grounding unless:

- The gun has been removed from the hazardous area;
- Or all spraying devices in the hazardous area are turned off, ventilation fans in the hazardous area are operating, and there are no flammable vapors in the area (such as open solvent containers or fumes from spraying).

Failure to follow this warning could cause fire, explosion, and electric shock and result in serious injury and property damage.

Test Gun Resistance

1. Flush and dry the fluid passage.
2. Measure resistance between the electrode needle tip (25a) and the turbine air inlet fitting (TA); it should be 148-193 megohms.
3. If outside this range go to **Test Power Supply Resistance**, page 22. If in range, and there are performance concerns, see **Electrical Troubleshooting**, page 27 for other possible causes of poor performance.

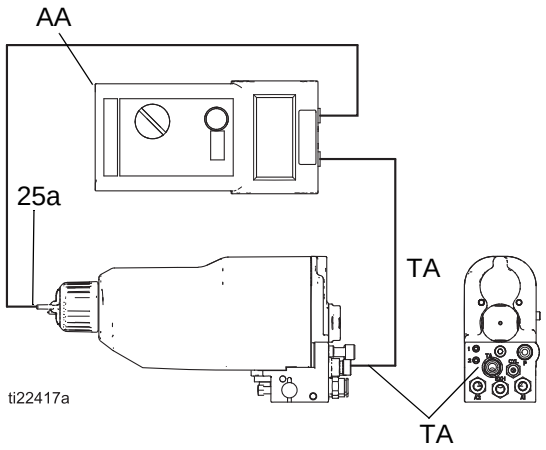

FIG. 17 . Test Gun Resistance

Test Power Supply Resistance

1. Remove the power supply (7). See **Power Supply Removal and Replacement**, page 33.
2. Remove the turbine (8) from the power supply. See **Turbine Removal and Replacement**, page 34.
3. Measure resistance from the power supply's ground strips (EE) to the spring (7a). The resistance should be 130–160 megohms for 85kV guns. See FIGURE 18.

   If outside this range, replace the power supply. If in range, and there are performance concerns, go to **Test Barrel Resistance**, page 23.
4. Refer to **Electrical Troubleshooting**, page 27 for other possible causes of poor performance.

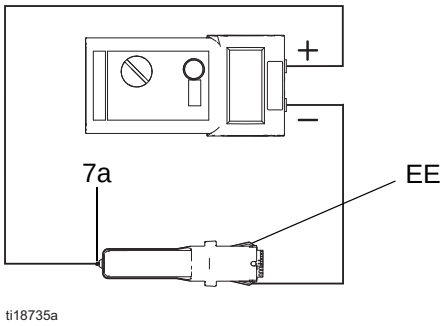

FIG. 18 Test Power Supply Resistance

5. Be sure the spring (7a) is in place before reinstalling the power supply.

Test Barrel Resistance

1. Insert a conductive rod (B) into the gun barrel (removed for the power supply test) and against the metal contact (C) in the front of the barrel.
2. Measure the resistance between the conductive rod (B) and the conductive ring (33). See FIGURE 19. The resistance should be 10-30 megohms. If the resistance is incorrect, make sure the metal contact (C) in the barrel and the conductive ring (33) are clean and undamaged.
3. If the resistance is still outside the range, remove the conductive ring (33) and measure the resistance between the conductive rod (B) and the wire lead at the bottom of the conductive ring groove.
4. If the resistance is in range, replace the conductive ring (33) with a new one. Insert the ends of the conductive ring into the slots (S) at the front of the barrel, then press the ring firmly into the groove.

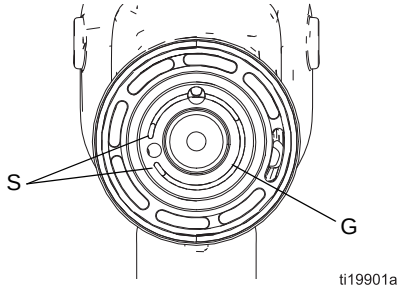

The conductive ring (33) is a conductive (metal) contact ring, not a sealing o-ring. To reduce the risk of fire, explosion, or electric shock:

- Do not remove the conductive ring except to replace it.
- Never operate the gun without the conductive ring in place.
- Do not replace the conductive ring with anything but a genuine Graco part.

5. If the resistance is still outside the range, replace the gun barrel.

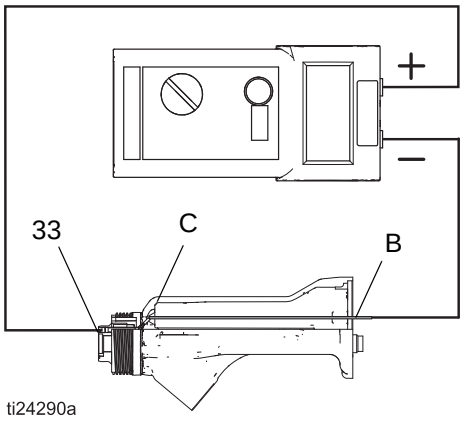

FIG. 19 Test Gun Barrel Resistance

Troubleshooting

Installing and servicing this equipment requires access to parts which may cause an electric shock or other serious injury if the work is not performed properly. Do not install or repair this equipment unless you are trained and qualified.

To reduce the risk of a fluid injection injury, always follow the **Pressure Relief Procedure** on page 16 when you stop spraying and whenever you are instructed to relieve the pressure.

NOTE: Check all possible remedies in the Trouble-shooting Chart before disassembling the gun.

Spray Pattern Troubleshooting

NOTE: Some spray pattern problems are caused by the improper balance between air and fluid.

Problem	Cause	Solution
Fluttering or spitting spray. 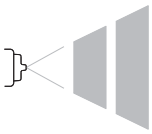	No fluid.	Refill supply.
	Air in fluid supply.	Check fluid source. Refill.
Irregular pattern. 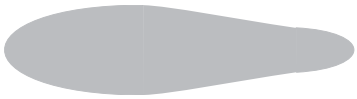	Fluid buildup; partially plugged tip.	Clean. See page 20.
	Worn/damaged tip or air cap holes.	Clean or replace.
Pattern pushed to one side; air cap gets dirty.	Air cap holes plugged.	Clean. See page 20.
Tails in pattern. 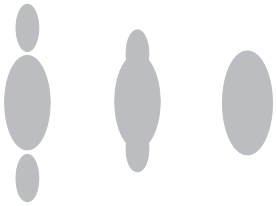	Atomization air pressure too low.	Increase atomization air pressure.
	Fluid pressure too low.	Increase.
Fluid buildup on air cap/tip guard.	Atomization air pressure too high.	Decrease.
	Fluid pressure too low.	Increase.
	Plugged or damaged air cap hole	Clean air cap, see page 20

Gun Operation Troubleshooting

Problem	Cause	Solution
Excessive spray fog.	Atomizing air pressure too high.	Decrease air pressure (A1) as low as possible
	Fluid too thin.	Increase viscosity or increase fluid flow rate.
“Orange Peel” finish.	Atomization air pressure too low.	Increase air pressure; use lowest pressure necessary.
	Spray tip is too large.	Use smaller tip; see ., page 51.
	Poorly mixed or filtered fluid.	Remix or re-filter fluid.
	Fluid too thick.	Reduce viscosity.
Fluid leaks from the fluid packing area	Worn fluid needle packings or rod.	Replace fluid needle assembly (8); see **Fluid Needle Replacement**, page 31.
Air leaks from the air cap	Worn piston stem o-rings (11e, 11f)	Replace, see **Piston Repair**, page 32.
Fluid leakage from the front of the gun	Worn or damaged fluid needle ball.	See **Fluid Needle Replacement**, page 31
	Worn fluid seat housing.	Replace; see **Air Cap/Tip Guard, Spray Tip, and Fluid Seat Housing Replacement** page 29.
	Loose spray tip.	Tighten retaining ring (1); see **Air Cap/Tip Guard, Spray Tip, and Fluid Seat Housing Replacement** page 29.
	Damaged tip seal (3a).	Replace; see **Air Cap/Tip Guard, Spray Tip, and Fluid Seat Housing Replacement** page 29.

Problem	Cause	Solution
Gun does not spray	Low fluid supply.	Add fluid if necessary.
	Damaged spray tip.	Replace; see **Air Cap/Tip Guard, Spray Tip, and Fluid Seat Housing Replacement** page 29.
	Dirty or clogged spray tip (3).	Clean; see **Clean the Spray Gun**, page 20.
	Damaged fluid needle (2).	Replace, see **Fluid Needle Replacement** page 31.
	Piston (11) not actuating.	Check cylinder air. Check piston o-ring (11d); see **Piston Repair**, page 32.
	Actuator arm (15) is out of position.	Check actuator arm and nuts. See page 32.
Air leaks from manifold	Gun is not securely tightened to manifold	Tighten manifold screws
	Worn or missing o-rings	Replace o-rings. See page 32
Fluid doesn't shut off properly	Fluid buildup on fluid needle (2)	Replace needle; **Fluid Needle Replacement**, page 31
	Piston sticking	Clean or replace o-rings. See **Piston Repair**, page 32
Excessive paint wrap back to operator	Poor grounding	See **Grounding**, page 14
	Incorrect distance from gun to part	Should be 8-12 in. (200-300 mm).

Electrical Troubleshooting

Problem	Cause	Solution
Poor wrap.	Turbine air is not turned on.	Turn on.
	Booth exhaust velocity is too high.	Reduce velocity to within code limits.
	Atomization air pressure too high.	Decrease.
	Fluid pressure too high.	Decrease, or replace worn tip.
	Incorrect distance from gun to part.	Should be 8-12 in. (200-300 mm).
	Poorly grounded parts.	Resistance must be 1 megohm or less. Clean workpiece hangers.
	Faulty gun resistance.	See **Test Gun Resistance** on page 22.
	Low fluid resistivity.	**Check Fluid Resistivity**, page 15.
	Fluid leaks from the fluid needle packings and causes a short	Clean the fluid needle cavity and see Fluid Needle Replacement, page 31
	Faulty turbine	See **Turbine Removal and Replacement** page 34
	No power.	Replace power supply, see page 33
ES indicator light is not lit (standard models only)	No power	Check power supply, turbine, turbine ribbon cable. See **Power Supply Removal and Replacement**, page 33 and **Turbine Removal and Replacement**, page 34.
ES indicator light is amber (standard models only)	Turbine speed is too low	Increase air pressure until indicator is green.
ES indicator light is red (standard models only)	Turbine speed is too high	Decrease air pressure until indicator is green
No voltage or low voltage reading on the Pro Xp Auto Control module	Damaged fiber optic cable or connection.	Check; replace damaged parts. See Pro Xp Auto Control Module manual 332989.
	Turbine air is not turned on.	Turn on.
Pro Xp Auto Control Module displays event code (smart models only)		See manual 332989 for Event Code Troubleshooting.

Repair

Prepare the Gun for Service

Installing and repairing this equipment requires access to parts that may cause electric shock or other serious injury if the work is not performed properly. Do not install or service this equipment unless you are trained and qualified.

To reduce the risk of a fluid injection injury, always follow the **Pressure Relief Procedure** when you stop spraying and whenever you are instructed to relieve the pressure.

NOTE:

- Check all possible remedies in **Troubleshooting** before disassembling the gun.
- Use a vise with padded jaws to prevent damage to plastic parts.
- Lubricate the power supply, some fluid needle parts (8), and certain fluid fittings with Part No. 116553 Dielectric Grease, as specified in the text.
- Lightly lubricate o-rings and seals with non-silicone grease. Order Part No. 111265 Lubricant. Do not over-lubricate.
- Only use genuine Graco parts. Do not mix or use parts from other PRO Gun models.

1. Flush and clean the gun, page 20.
2. Relieve the pressure. Follow the **Pressure Relief Procedure**, page 16.
3. Remove the gun from the manifold.
4. Remove the gun from the work site. Repair area must be clean.

Remove the Gun from the Manifold

See FIGURE 20.

1. Disconnect fluid hose from manifold.
2. Holding the gun firmly in hand, loosen the two screws (21) from the back and bottom of the manifold.

NOTE: The screws (21) should stay on the manifold.

3. Remove the gun from the manifold and take it to the service area.

NOTE: The five o-rings (18) should stay on the gun.

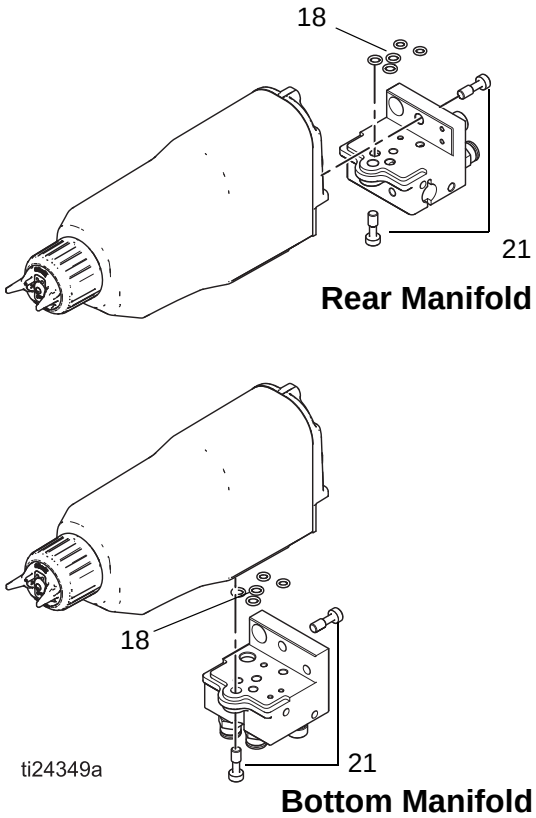

FIG. 20 . Remove Gun from Manifold

Install the Gun on the Manifold

See FIGURE 20.

1. Make sure the five o-rings (18) are in place on the gun. Inspect the parts for damage and replace them as needed.
2. Secure the gun to the manifold by tightening the two screws (21).
3. Reconnect the fluid hose to the manifold.

Air Cap/Tip Guard, Spray Tip, and Fluid Seat Housing Replacement

1. See **Prepare the Gun for Service**, page 28.
2. Remove the retaining ring (24), shroud (26) and air cap/tip guard assembly (25).

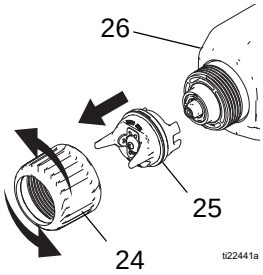

FIG. 21 Remove Air Cap

3. Remove shroud (26).
4. Disassemble the air cap assembly. Check the condition of the u-cup (24a), o-ring (25b), and tip gasket (3a). Replace any damaged parts.

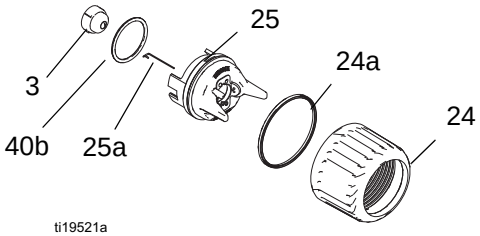

FIG. 22 Disassemble Air Cap Assembly

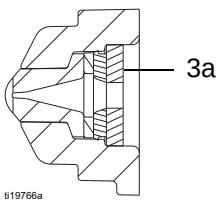

FIG. 23 Tip Gasket

5. To replace the electrode (25a), see **Electrode Replacement**, page 30.

The conductive ring (33) is a conductive metal contact ring, not a sealing o-ring. To reduce the risk of fire, explosion, or electric shock:

- Do not remove the conductive ring except to replace it.
- Never operate the gun without the conductive ring in place.
- Do not replace the conductive ring with anything but a genuine Graco part.

6. Remove the fluid seat housing (4) using the multi-tool (48).

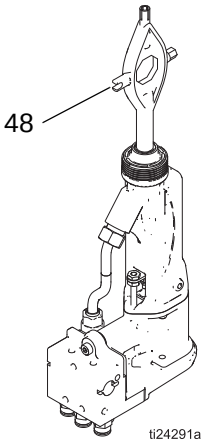

FIG. 24 Seat Housing Replacement

NOTICE

To avoid damaging the seat housing and gun barrel, never over tighten the seat housing. Over tightening may affect the fluid shutoff.

7. Install the fluid seat housing (4). Tighten until snug, then 1/4 turn more.
8. Check that the spray tip gasket (3a) is in place. Align the spray tip tab with the groove in the air cap (25). Install the spray tip (3) in the air cap.
9. Make sure that the electrode (25a) is installed correctly in the air cap.
10. Check that the air cap o-ring (25b) is in place.
11. Check that the u-cup (24a) is in place on the retaining ring (24). The lips of the u-cup must face forward.

12. Install the shroud.

NOTICE

To avoid damaging the tip guard, orient the air cap/tip guard assembly (25) before tightening the retaining ring (24). Do not turn the air cap when the retaining ring is tight.

13. Orientate the air cap and tighten the retaining ring securely.
14. See **Test Gun Resistance**, page 22.

Electrode Replacement

Installing and repairing this equipment requires access to parts that may cause electric shock or other serious injury if the work is not performed properly. Do not install or service this equipment unless you are trained and qualified.

1. See **Prepare the Gun for Service**, page 28.
2. Remove the air cap/tip guard assembly (25). See **Air Cap/Tip Guard, Spray Tip, and Fluid Seat Housing Replacement**, page 29.
3. Pull the electrode (25a) out of the back of the air cap, using a needle-nose pliers.
4. Push the new electrode through the air cap hole. Make sure the short end (BB) of the electrode engages the hole (CC) in the back of the air cap. Press the electrode in place firmly with your fingers.
5. Install the air cap assembly.
6. See **Test Gun Resistance**, page 22.

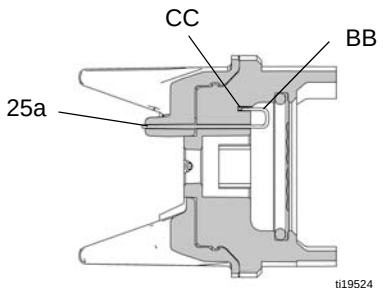

Fluid Tube Replacement

There are no replaceable parts in the fluid tube assembly. Only remove when necessary.

1. Prepare the gun for service, page 28.
2. Remove the air cap assembly, page 29. Remove the shroud (26).
3. Disconnect the bottom fluid tube nut (C). See FIGURE 25.

NOTE: Use two wrenches to remove the fluid tube fitting (C).

4. Carefully unscrew the top fluid tube nut (D).

NOTICE

Be careful not to damage the fluid tube assembly (35) when cleaning or installing it, especially the sealing surface (E). If the sealing surface is damaged, the entire fluid tube assembly must be replaced.

5. Apply Part No. 116553 dielectric grease to the entire length of the plastic extension on the end of the fluid tube (35).
6. Apply low strength thread sealant to the fluid tube nut threads.
7. Install the fluid tube into the gun barrel and tighten the top nut (D) hand-tight, then 1/4 to 1/2 turn with a wrench. There will be a gap between the nut and barrel. Do not over tighten the nut.
8. Make sure the fluid filter (34) is in place. Tighten the bottom fluid tube nut (C) onto the fitting (32) and torque to 20-30 in-lb (2.3-3.4 N•m). Make sure the top nut remains tight.

NOTE: Use two wrenches to install the fluid tube fitting (C).

9. Reinstall the shroud and air cap assembly, page 29.
10. Test gun resistance, page 22.

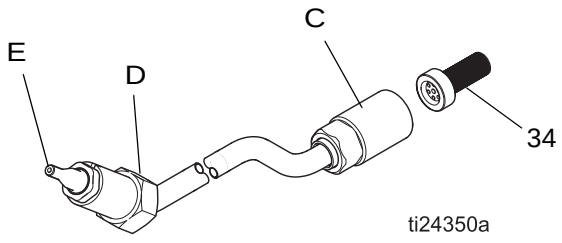

FIG. 25 Fluid Tube Replacement

Fluid Filter Removal

1. Prepare the gun for service, page 28.
2. Remove the air cap assembly, page 29. Remove the shroud (26).
3. Disconnect the bottom fluid tube nut (C).

NOTE: Use two wrenches to remove the fluid tube fitting (C).

4. Remove the fluid filter (34). Clean or replace the filter, as needed.
5. Install the fluid filter. Tighten the bottom fluid tube nut (C) onto the fitting (32) and torque to 20-30 in-lb (2.3-3.4 N•m). Make sure the top nut (D) remains tight.

NOTE: Use two wrenches to install the fluid tube fitting (C).

NOTICE
Be sure the fluid tube (35) is not twisted after tightening the bottom nut (C).

6. Reinstall the shroud and air cap assembly, page 29.
7. Test gun resistance, page 22.

Fluid Needle Replacement

1. Prepare the gun for service, page 28.
2. Remove the air cap/tip guard assembly and seat housing, page 29.
3. Remove the barrel (1), page 33.
4. Remove the spring cap (31) and the spring (5) from the barrel. See FIGURE 26.
5. Be sure the seat housing (4) is removed. Place the 2 mm ball end wrench (45) in the back of the fluid needle assembly. Push the tool in and turn it counterclockwise about 12 full turns to unthread the needle.
6. Using the multi-tool (48), pull back on the packing nut (N) to remove the fluid needle assembly. See FIGURE 27.
7. Install the fluid needle assembly in the gun barrel. Lubricate the front of the needle with dielectric grease, if not already lubricated. Push in on the needle with the 2 mm ball end wrench (45) and tighten. See FIGURE 28.
8. Install the spring (5).
9. Install the spring cap (31), making sure the grounding spring (6) is in place. Tighten until snug. **Do not over tighten.**
10. Install the barrel (1), page 33.

NOTICE
To avoid damaging the seat housing and gun barrel, never over tighten the seat housing. Over tightening may result in improper fluid shutoff.

11. Install the seat housing and air cap, page 29.
12. Test gun resistance, page 22.

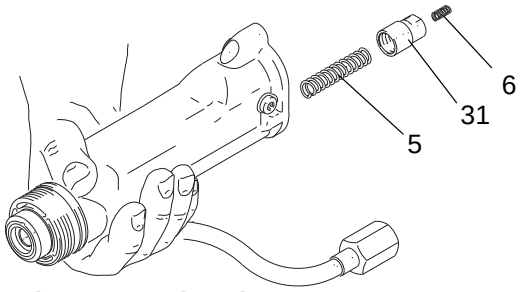

FIG. 26 Spring Cap and Springs

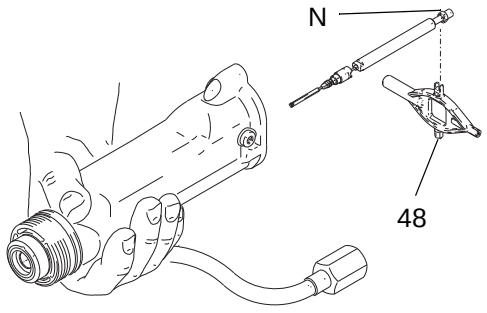

FIG. 27 Fluid Needle Removal

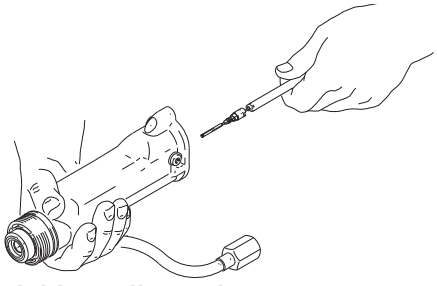

FIG. 28 Fluid Needle Replacement

Piston Repair

1. Prepare the gun for service, page 28.
2. Remove the air cap, page 29. Remove the gun shroud (26).
3. Remove the jam nut (16a), actuator arm (15), and adjustment nut (16b). See FIGURE 30.
4. Remove piston cap (13) and spring (12) from the rear of the gun.
5. Push on the piston rod (11) to push the piston out the back of the gun.
6. Inspect the o-rings (11d, 11e, 11f, 11g) for damage. See Table 3 and FIGURE 29.
7. Lubricate the o-rings (11d, 11e, 11f, 11g) with non-silicone grease, Part No. 111265. Do not over-lubricate.
8. Align the two stems (11c) with the holes in the gun body and press the piston assembly into the back of the gun until it bottoms. Install piston cap (13) and spring (12).
9. Install and adjust the actuator arm, page 32.

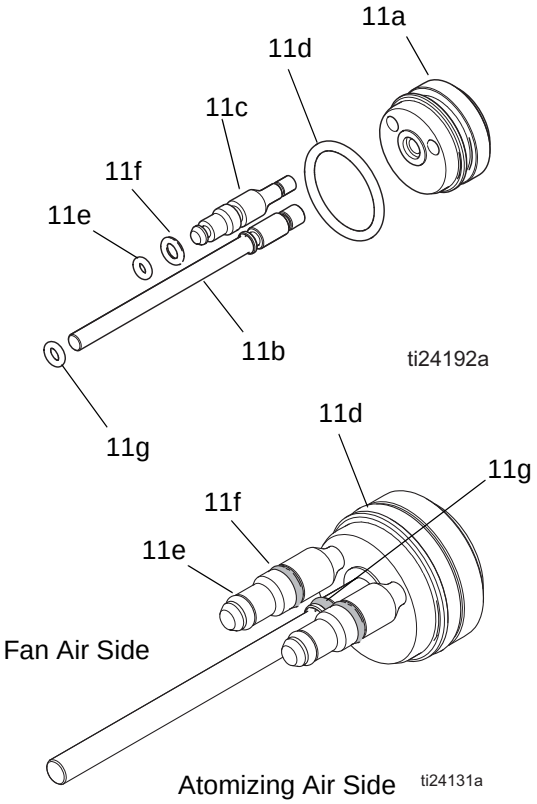

FIG. 29 . Piston O-Rings

Table 3. Piston O-Rings

Description	Function
Shaft O-Ring (11g)	Seals cylinder air along the piston rod (34b). Replace if air leaks along rod.
Front O-Ring (11e)	Air shutoff seal. Replace if air leaks from air cap when gun is de-triggered.
Back O-Ring (11f)	Separates cylinder air from fan and atomizing air.
Piston O-Ring (11d)	Replace if air leaks from small vent hole at back of manifold when gun is triggered.
O-rings included in air seal repair kit 24W390.	

Adjust the Actuator Arm

NOTE: The seat housing (4) must be in place when removing or installing the jam nut and actuator arm.

See FIGURE 30.

1. Install the adjustment nut (16b), actuator arm (15), and jam nut (16a) onto the piston rod (11b).
2. Position the parts so there is a 0.125 in. (3 mm) gap between the actuator arm (15) and the fluid packing rod nut (E). This allows the atomizing air to actuate before the fluid.
3. Tighten the adjustment nut (16a) against the actuator arm (15). Check that the 0.125 in. (3 mm) gap has been maintained. Tighten the jam nut (16a).
4. Test gun resistance, page 22.
5. Install the gun shroud (26) and air cap/tip guard assembly (25), page 29.
6. Install the gun onto the manifold. See page 29.

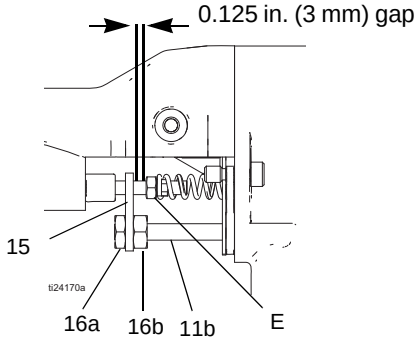

FIG. 30 . Actuator Arm Adjustment

Barrel Removal

See FIGURE 31

1. Prepare the gun for service and remove the manifold, page 28.
2. Remove the air cap and tip, page 29. Remove the gun shroud (26).
3. Carefully loosen the fluid fitting nut (C). Pull the tube (35) out of the fitting (32). See FIGURE 31.

NOTE: Use two wrenches to remove the fluid tube fitting (C).

4. Remove the adjustment nuts (16a, 16b) and actuator arm (15). See FIGURE 30.
5. Loosen the two screws (19). See FIGURE 31.

NOTICE

To avoid damaging the power supply, pull the gun barrel (1) straight away from the gun body (10). If necessary, gently move the gun barrel from side to side to free it from the gun body.

6. Hold the gun body (10) with one hand and pull the barrel (1) straight off the body. See FIGURE 31.

Barrel Installation

See FIGURE 31

1. Verify the gasket (9) and grounding spring (6) are in place and the gasket air holes are aligned properly. Replace the gasket if damaged.
2. Make sure the spring is in place on the tip of the power supply (7). Liberally apply dielectric grease to the tip of the power supply. Place the barrel (1) over the power supply and onto the gun body (10).
3. Tighten the two barrel screws (19) oppositely and evenly (about a half turn past snug or 20 in-lbs). Do not over-tighten.

NOTICE

To avoid damaging the gun barrel, do not over-tighten the screws (19).

4. Make sure the fluid filter (34) is in place. Tighten the bottom nut (C) onto the fitting (32) and torque to 20-30 in-lb (2.3-3.4 N•m). Make sure the top nut (D) remains tight.

NOTE: Use two wrenches to install the fluid tube fitting (C).

5. Install and adjust the actuator arm (15), jam nut (16a), and adjustment nut (16b). See page 32.
6. Test gun resistance, page 22.
7. Install the gun shroud (26) and air cap, page 29.
8. Install the gun onto the manifold. See page 29.

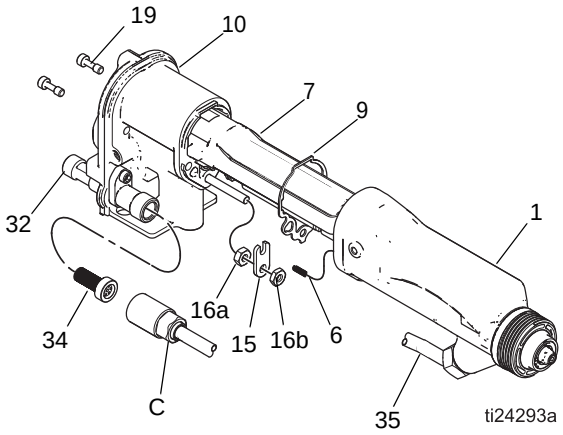

FIG. 31 . Barrel

Power Supply Removal and Replacement

- Inspect the gun handle power supply cavity for dirt or moisture. Clean with a clean, dry rag.
- Do not expose gasket (9) to solvents.

1. See **Prepare the Gun for Service**, page 28.
2. See **Barrel Removal**, page 33.

NOTICE

Be careful when handling the power supply (7) to avoid damaging it.

3. Grasp the power supply (7) with your hand. With a gentle side to side motion, free the power supply/turbine assembly from the gun body (10), then carefully pull it straight out.

   Smart models only: disconnect the flexible circuit (30) from the socket at the top of the gun body.

4. Inspect the power supply and turbine for damage.

5. To separate the power supply (7) from the turbine (8), disconnect the 3-wire ribbon connector (PC) from the power supply. See FIGURE 32.

   Smart models only: disconnect the 6–pin flexible circuit (30) from the power supply.

   Slide the turbine up and off the power supply.

6. See **Test Power Supply Resistance**, page 22. Replace the power supply if necessary. To repair the turbine, see **Turbine Removal and Replacement**, page 34.

NOTICE

To prevent damage to the cable and possible interruption of the ground continuity, bend the turbine's 3–wire ribbon cable (PC) upward and back, so the bend faces the power supply and the connector is at the top.

7. Connect the 3-wire ribbon connector (PC) to the power supply.

   Smart models only: connect the 6–pin flexible circuit (30) to the power supply.

   Tuck the ribbon forward, under the power supply. Slide the turbine (8) down onto the power supply (7).

8. Insert the power supply/turbine assembly in the gun body (10). Make sure the ground strips (EE) make contact with the handle.

   Smart models only: align the connector of the 6–pin flexible circuit (30) with the socket (CS) at the top of the handle. See FIGURE 32.

   Push the connector securely into the socket as you slide the power supply/turbine assembly into the handle.

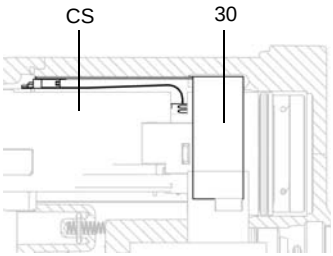

FIG. 32 . Connect Flexible Circuit

9. Make sure the gasket (9), ground spring (6), and power supply spring (7a) are in place. Replace gasket (9) if damaged. Assemble the barrel (1) to the gun body (10). See Barrel Installation, page 42.

10. See **Test Gun Resistance**, page 22.

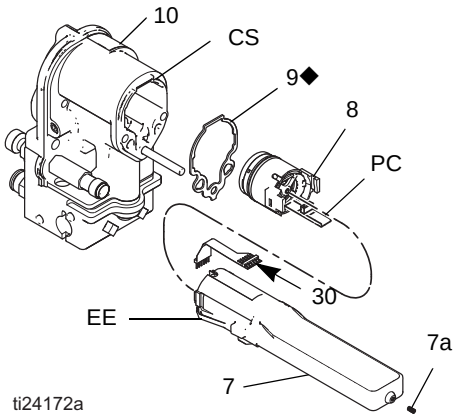

FIG. 33 . Power Supply

Turbine Removal and Replacement

NOTE: Replace turbine bearings after 2000 hours of operation. Order Part No. 24N706 Bearing Kit. Parts included in the kit are marked with a symbol (◆). See FIGURE 33 through FIGURE 36.

1. See **Prepare the Gun for Service**, page 28.

2. Remove the power supply/turbine assembly and disconnect the turbine. See **Power Supply Removal and Replacement**, page 33.

3. Measure resistance between the two outer terminals of the 3-wire connector (PC); it should be 2.0–6.0 ohms. If outside this range, replace the turbine coil (8a).

4. Using a flat blade screwdriver, pry the clip (8h) off the housing (8d). Remove the cap (8f), using a thin blade or screwdriver.

5. If necessary, rotate the fan (8e) so its blades clear the four bearing tabs (T) of the housing (8d). See FIGURE 34.

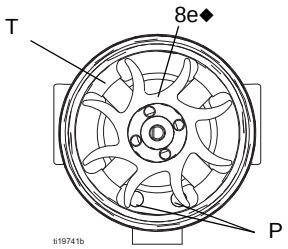

FIG. 34 . Fan Orientation

6. Push the fan and coil assembly (8a) out the front of the housing (8d).

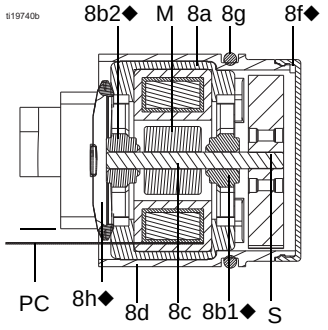

FIG. 35 . Turbine Cross-Section.

NOTICE
Do not scratch or damage the magnet (M) or shaft (S). Do not pinch or damage the 3–wire connector (PC) when disassembling and reassembling the bearings.

7. Hold the coil assembly (8a) on a workbench with the fan end facing up. Using a wide blade screwdriver, pry the fan (8e)off the shaft (S).

8. Remove the top bearing (8b2).

9. Remove the bottom bearing (8b1).

10. Install the new bottom bearing (8b1.) on the long end of the shaft (S). The flatter side of the bearing must face away from the magnet (M). Install in the coil (8a) so the bearing blades are flush with the surface of the coil.

11. Press the new top bearing (8b2.) onto the short end of the shaft so the bearing blades are flush with the surface of the coil (8a). The flatter side of the bearing must face away from the coil.

12. Hold the coil assembly (8a) on a workbench with the fan end facing up. Press the fan (8e.) onto the long end of the shaft (S).The fan blades must be oriented as shown in FIGURE 34.

13. Carefully press the coil assembly (8a) into the front of the housing (8d.) while aligning the pin on the coil with the slot in the housing. The 3–wire connector (PC) must be positioned below the wider notch (W) of the housing tabs.

14. Rotate the fan (8e) so its blades clear the four bearing tabs (T) at the back of the housing. Ensure that the blades of the bottom bearing (8b1.) align with the tabs.

15. Seat the coil fully into the housing (8d.). Secure with the clip (8h.),ensuring that its tabs engage the slots in the housing.

16. Ensure that the o-ring (8g) is in place. Install the cap (8f).

17. Install the turbine on the power supply, and install both parts in the handle. See **Power Supply Removal and Replacement**, page 33.

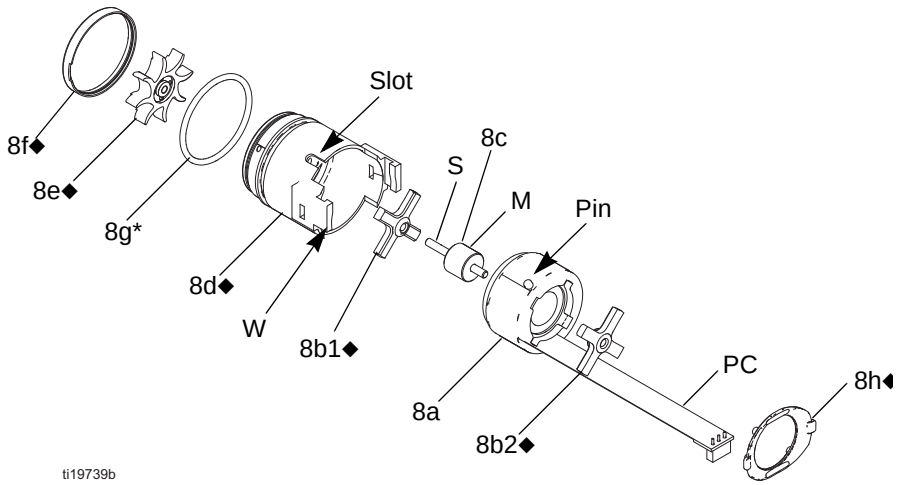

FIG. 36 . Turbine

Parts

Standard Pro Xp Auto AA Gun Models

HA1T10, Rear Manifold
HA2T10, Bottom Manifold

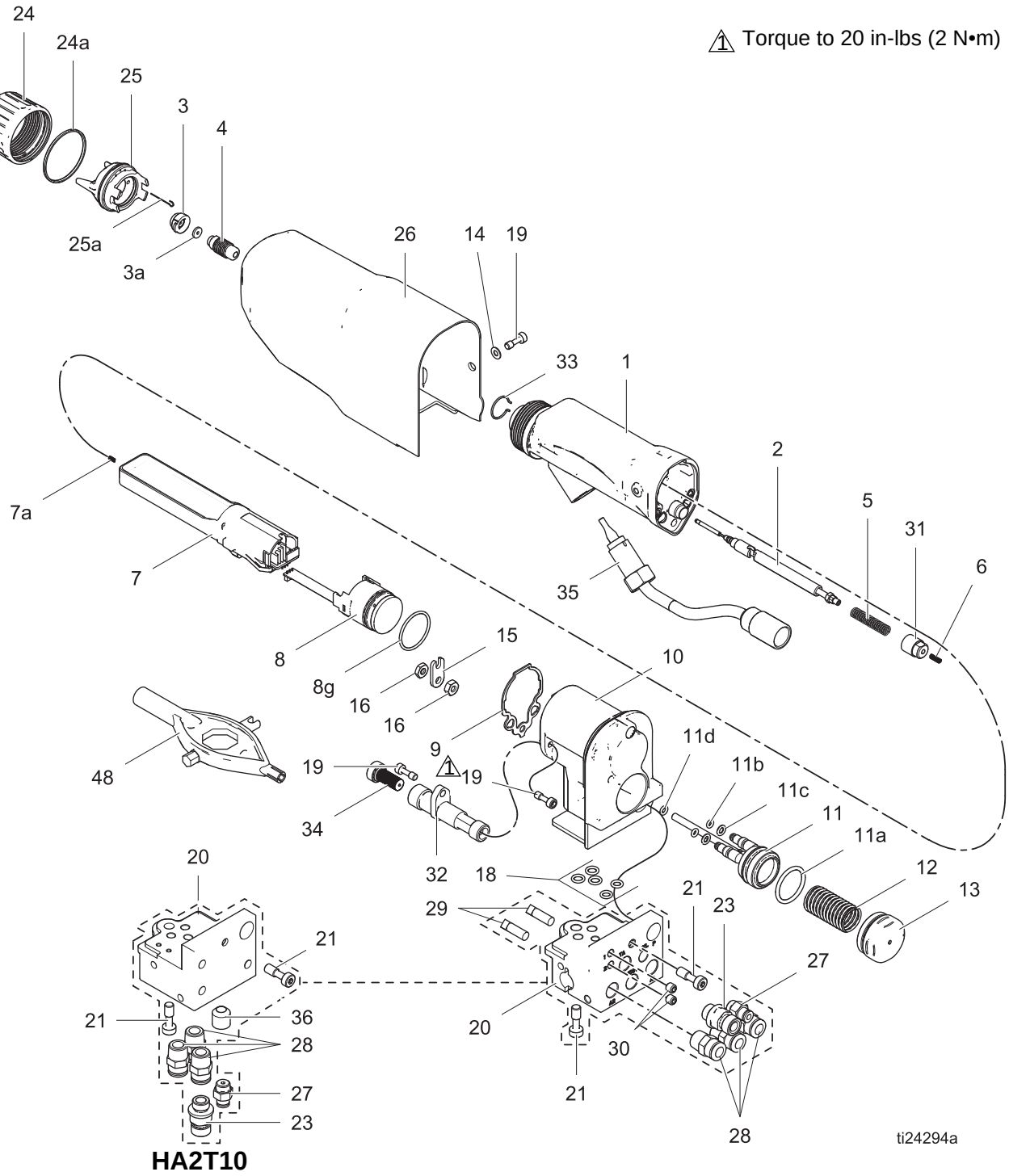

HA2T10

Standard Pro Xp Auto AA Gun Models

HA1T10, Rear Manifold
HA2T10, Bottom Manifold

Ref. No.	Part No.	Description	Qty
1	24W874	BODY, gun assy, includes 9, 33	1
2	24N781	NEEDLE ASSEMBLY, includes 5	1
3	AEMxxx AEFxxx	TIP ASSEMBLY; customer's choice	1
3a	183459	GASKET, tip	
4	24N725	HOUSING, seat	1
5	24N782	SPRING, fluid needle	1
6	197624	SPRING, compression	1
7	24N661	POWER SUPPLY, 85 kV	1
7a	24N979	SPRING	1
8	24N664	See **Turbine Assembly**, page 41	1
8g■	110073	O-RING, packing	1
9■◆	24N699	GASKET, barrel	1
10	24W380	BODY, assy, AA. Includes 18, 19	1
11	24W396	PISTON, assy, actuation, auto	1
11a	17B704	O-RING, packing	1
11b	111504	O-RING, packing	2
11c	112319	O-RING, packing	2
11d	111508	O-RING, packing	1
12	112640	SPRING, compression	1
13	24W397	CAP, piston, actuation	1
14	513505	WASHER, plain #10 SST	1
15	24W398	ARM, fluid actuator, XP (includes 16, qty 2)	1
16	100166	NUT, full hex	2
18■	111450	PACKING, O-RING	5
19	24N740	SCREW, ES gun (pack of 2)	4
20	24W394	MANIFOLD, rear inlet (HA1T10)	1
	24W395	MANIFOLD, bottom inlet (HA2T10)	1
21❖★	24W399	SCREW, modified, 1/4-20, XP Auto (pack of 2)	2
23❖★	24W411	FITTING, Adapter, M12 TO 1/4, LH, XP	1
24	24N793	RING, retainer, assy; includes 24a	1
24a■	198307	PACKING, u-cup; UHMWPE	1
25	24N727	See Air Cap Assembly, page 40	1

Ref. No.	Part No.	Description	Qty
25a	24N643	ELECTRODE, package of 5	1
26	24W388	COVER, shroud, Auto XP	1
27❖★	114263	FITTING, connector, male	1
28❖★	115950	FITTING, connector, 1/4npt (M), 5/16T	3
29❖★	110465	SCREW, set (HA1T10 only)	2
30	102207	SCREW, set, SCH	2
31	24N785	CAP, spring, includes 6	1
32	24W752	FITTING, fluid, AA hose includes 19 qty 1	1
33	24N747	RING, conductive	1
34	238561	FILTER, tip (3 pack)	1
35	24W387	HOSE, assy	1
36 ★	117560	SCREW, set	1
37	116553	GREASE, dielectric; 1 oz (30 ml) tube (not shown)	1
40▲	16P802	SIGN, warning (not shown)	1
42▲	179791	TAG, warning (not shown)	1
43▲	222385	TAG, warning (not shown)	1
44	276741	MULTI-TOOL (not shown)	1
45	107460	WRENCH, ball end, 4 mm (not shown)	1
46	112080	WRENCH, ball end, 2 mm (not shown)	1

▲ Replacement Warning labels, signs, tags, and cards are available at no cost.

■ Included in Air Seal Repair Kit 24W390 (purchase separately)

❖ Included in Rear Manifold Repair Kit 24W394 (purchase separately)

★ Included in Bottom Manifold Repair Kit 24W395 (purchase separately)

◆ Included in Turbine Assembly 24N664 (purchase separately). See **Turbine Assembly**, page 41.

Smart Pro Xp Auto AA Gun Models

HA1M10, Rear Manifold
HA2M10, Bottom Manifold

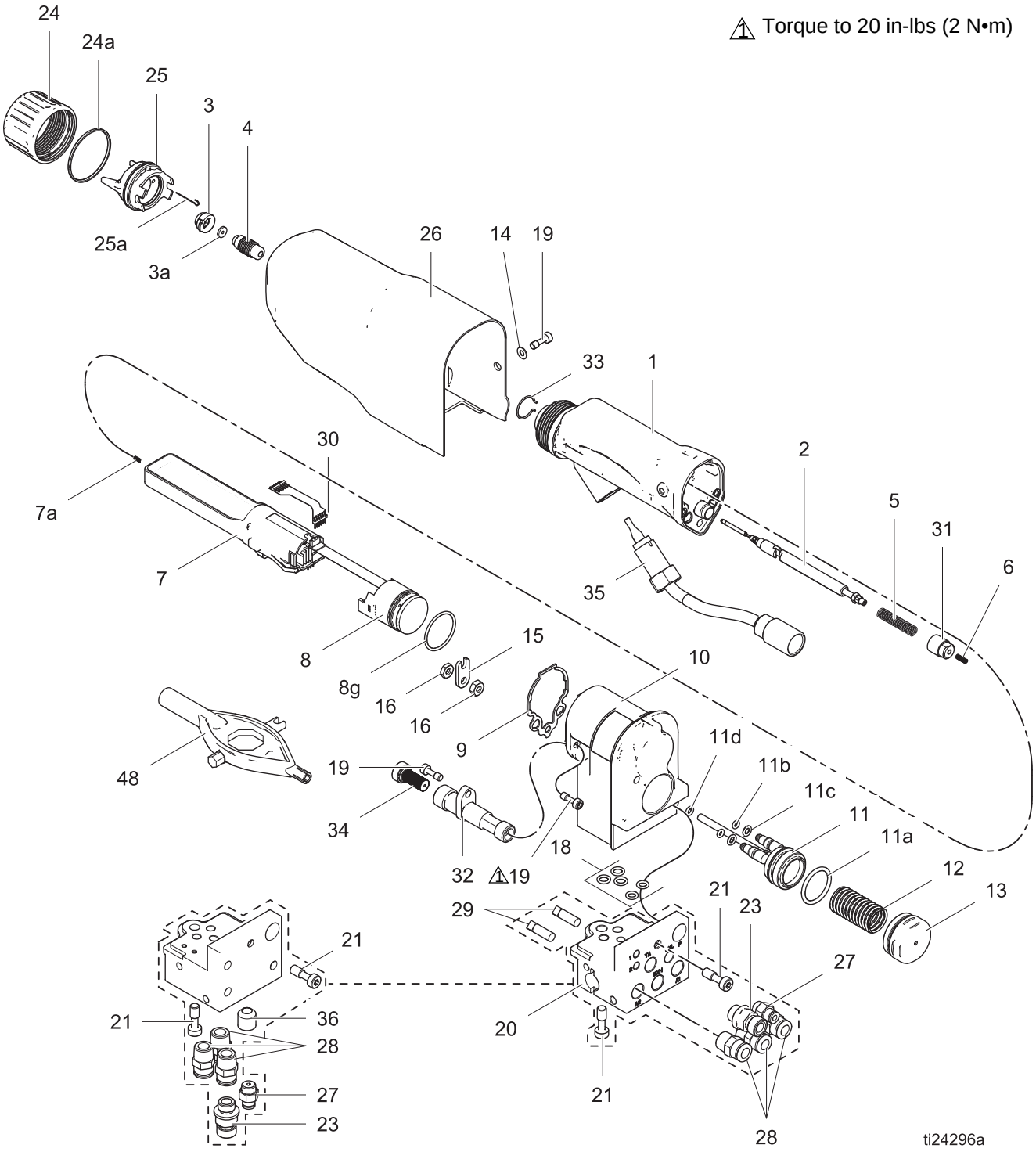

HA2M10

Smart Pro Xp Auto AA Gun Models

HA1M10, Rear Manifold
HA2M10, Bottom Manifold

Ref. No.	Part No.	Description	Qty
1	24W874	BODY, gun assy, includes 9, 33	1
2	24N781	NEEDLE ASSEMBLY, includes 5	1
3	AEMxxx AEFxxx	TIP ASSEMBLY; customer's choice	1
3a	183459	GASKET, tip	
4	24N725	HOUSING, seat	1
5	24N782	SPRING, fluid needle	1
6	197624	SPRING, compression	1
7	24N661	POWER SUPPLY, 85 kV	1
7a	24N979	SPRING	1
8	24N664	See **Turbine Assembly**, page 41	1
8g■	110073	O-RING, packing	1
9■◆	24N699	GASKET, barrel	1
10	24W869	BODY, assy, AA, bottom inlet HA2M10	1
	24W384	BODY, assy, AA, rear inlet HA1M10, includes 18, 19	1
11	24W396	PISTON, assy, actuation, auto	1
11a	17B704	O-RING, packing	1
11b	111504	O-RING, packing	2
11c	112319	O-RING, packing	2
11d	111508	O-RING, packing	1
12	112640	SPRING, compression	1
13	24W397	CAP, piston, actuation	1
14	513505	WASHER, plain #10 SST	1
15	24W398	ARM, fluid actuator, XP (includes 16, qty 2)	1
16	100166	NUT, full hex	2
18■	111450	PACKING, O-RING	5
19	24N740	SCREW, ES gun (Includes 2)	4
20	24W394	MANIFOLD, rear inlet HA1M10	1
	24W395	MANIFOLD, bottom inlet HA2M10	1
21❖★	24W399	SCREW, modified, 1/4-20, XP Auto (pack of 2)	2
23❖★	24W411	FITTING, Adapter, M12 TO 1/4, LH, XP	1
24	24N793	RING, retainer, assy; includes 24a	1
24a■	198307	PACKING, u-cup; UHMWPE	1
25	24N727	See Air Cap Assembly, page 40	1
25a	24N643	ELECTRODE, package of 5	1
26	24W388	COVER, shroud, Auto XP	1
27❖★	114263	FITTING, connector, male	1
28❖★	115950	FITTING, connector, 1/4npt (M), 5/16T	3
29❖★	110465	SCREW, set	2
30	245265	CIRCUIT, flexible	1
31	24N785	CAP, spring includes 6	1
32	24W752	FITTING, fluid, AA hose Includes 19 qty 1	1
33	24N747	RING, conductive	1
34	238561	FILTER, tip (3 pack)	1
35	24W387	HOSE, assy	1
36★	117560	SCREW, set	1
37	116553	GREASE, dielectric; 1 oz (30 ml) tube (not shown)	1
40▲	16P802	SIGN, warning (not shown)	1
42▲	179791	TAG, warning (not shown)	1
43▲	222385	TAG, warning (not shown)	1
44	276741	MULTI-TOOL (not shown)	1
45	107460	WRENCH, ball end, 4mm (not shown)	1
46	112080	WRENCH, ball end, 2mm (not shown)	
80	24W035	CONTROL MODULE, Pro Xp Auto (not shown). See 332989. Must be purchased separately.	1

▲ Replacement Warning labels, signs, tags, and cards are available at no cost.

■ Included in Air Seal Repair Kit 24W390 (purchase separately)

❖ Included in Rear Manifold Repair Kit 24W394 (purchase separately)

★ Included in Bottom Manifold Repair Kit 24W395 (purchase separately)

◆ Included in Turbine Assembly 24N664 (purchase separately). See **Turbine Assembly**, page 41.

Air Cap Assembly

Part No. 24N727 Air Cap Assembly

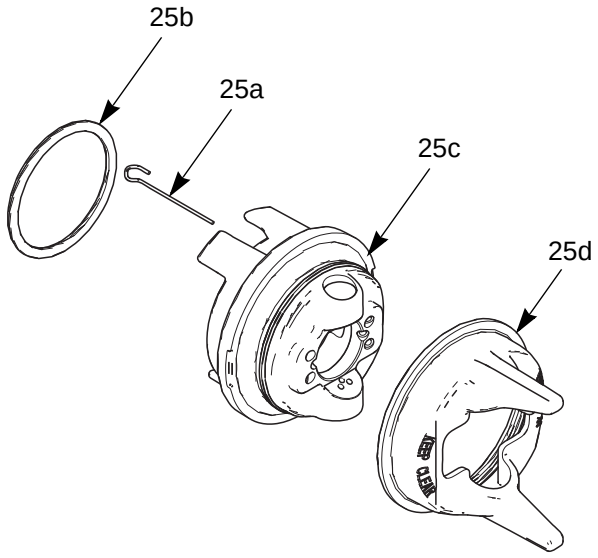

ti18652a

Ref. No.	Part No.	Description	Qty
3a	183459	GASKET, tip (not shown) See page 36.	5
25a	24N643	ELECTRODE, package of 5	1
25b	24N734	O-RING; PTFE; package of 5	1
	24E459	O-RING; PTFE; package of 10	1
25c	------	AIR CAP	1
25d	24N726	GUARD, tip, orange	1

Turbine Assembly

Part No. 24N664 Turbine Assembly

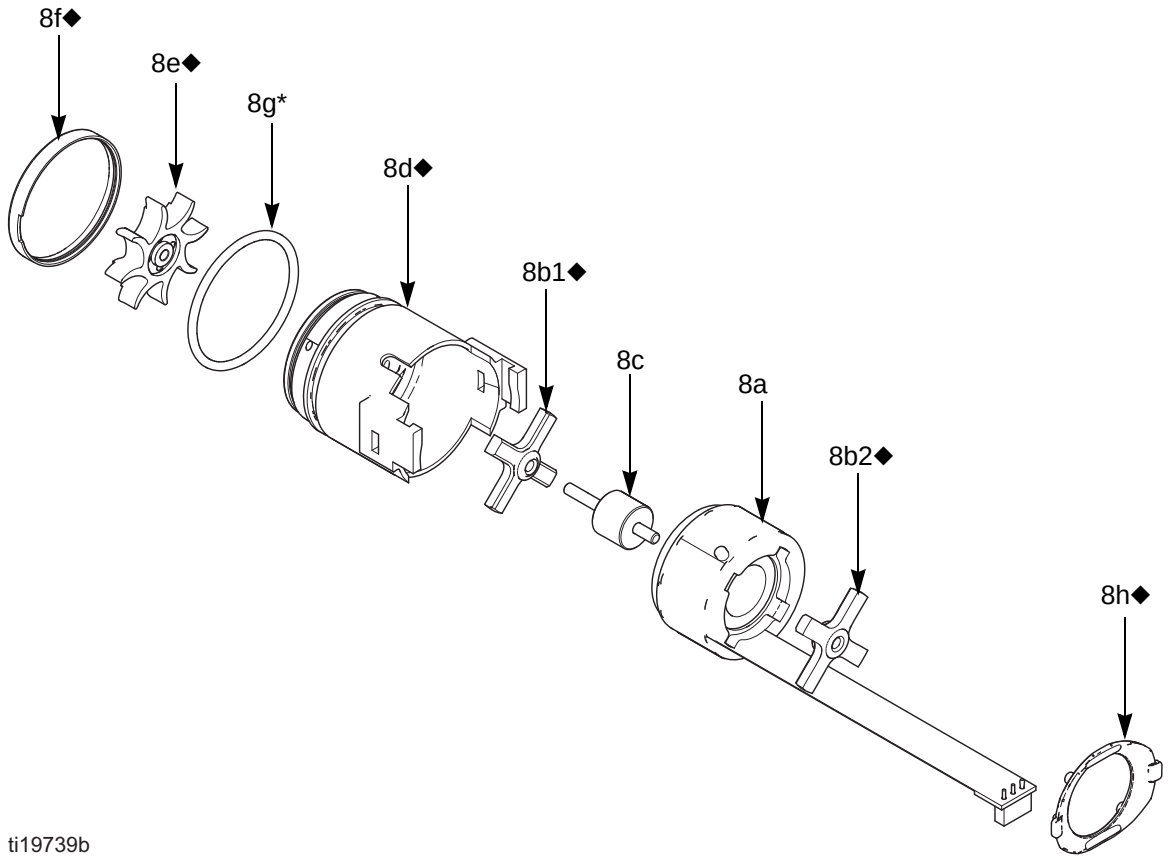

ti19739b

Ref. No.	Part No.	Description	Qty
8a	24N705	COIL, turbine	1
8b◆	24N706	BEARING KIT (includes two bearings, item 8e fan, and one item 8h clip)	1
8c	24Y264	SHAFT KIT (includes shaft and magnet)	1
8d◆	24N707	HOUSING; includes item 8f	1
8e◆	------	FAN; part of item 8b	1
8f◆	------	CAP, housing; part of item 8d	1
8g*	110073	O-RING	1
8h◆	24N709	CLIP; package of 5 (one clip included with item 15b)	1
9*◆	24N699	GASKET, barrel (not shown) See page 36.	1

* These parts are included in Air Seal Repair Kit 24W390 (purchase separately).

◆ These parts are included in Bearing Kit 24N706 (purchase separately).

Parts labeled ------ are not available separately

Robot Mount Bracket Assembly

Part No. 24X820 Mounting Bracket Assembly
Includes items

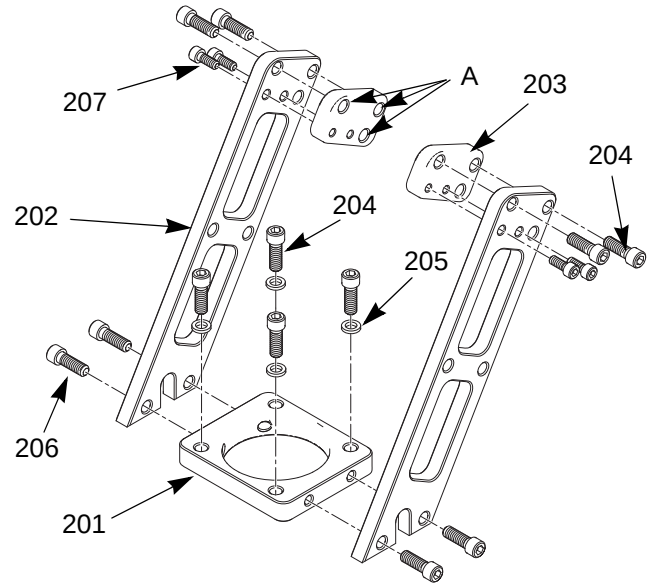

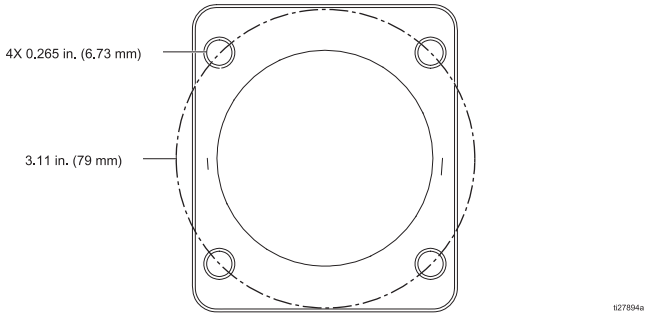

Ref. No.	Part No.	Description	Qty
201	- - -	PLATE, mounting	1
202	- - -	LEG	2
203	- - -	SPACER	2
204	112222	SCREW, cap, 1/4-20 x 1.0 in.	8
205	GC2042	WASHER, fender	2
206	111788	SCREW, cap, 1/4-20 x 0.75 in.	4
207	17A612	SCREW, cap, 10-24 x 0.5 in.	4
	- - -	Robot adapter plates (not shown; order separately); See Table 4 on page 43	

NOTE: Alignment holes (A) enable orienting gun spray angle at either 60° or 90° for either gun type.

Table 4. Robot Adapter Plates

Adapter Plate	Robot	Bolt Circle	Mounting Screws	Locating Pin Circle	Locating Pins
24Y128	MOTOMAN EPX1250	27.5 mm (1.083 in)	4X M5 x 0.8	27.5 mm (1.083 in)	5 mm
24Y129	MOTOMAN PX1450	32 mm (1.260 in)	8X M6 x 1.0	- - -	- - -
	MOTOMAN EPX2850, Three-roll type				
24Y634	MOTOMAN EPX2050	102 mm (4.02 in)	6X M6 x 1.0	102 mm (4.02 in)	2X 4 mm
	ABB IRB 580				
	ABB IRB 5400				
24Y650	MOTOMAN EPX2700	102 mm (4.02 in)	6X M6 x 1.0	102 mm (4.02 in)	2X 5 mm
	MOTOMAN EPX2800				
	MOTOMAN EPX2900				
	KAWASAKI KE610L				
	KAWASAKI KJ264				
	KAWASAKI KJ314				
24Y172	ABB IRB 540	36 mm (1.42 in)	3X M5	- - -	- - -
24Y173	ABB IRB 1400	40 mm (1.58 in)	4X M6	- - -	- - -
24Y768	FANUC PAINT MATE 200iA	31.5 mm (1.24 in)	4X M5	31.5 mm (1.24 in)	1X 5 mm
	FANUC PAINT MATE 200iA/5L				
24Y769	FANUC P-145	100 mm (3.94 in)	6X M5	100 mm (3.94 in)	1X 5 mm

Accessories

Smart Model Accessories and Fiber Optic Cables

Part No.	Description
24W035	Pro Xp Auto Control Module. See 332989 for details.

Fiber Optic Cables

See item V in FIGURE 7 on page 13. Connect gun manifold to Pro Xp Auto Control Module. See 332989.

Models with Rear Manifolds (Model numbers LA1xxx or HA1xxx)

Part No.	Description
24X003	Fiber Optic Cable, 25 ft (7.6 m)
24X004	Fiber Optic Cable, 50 ft (15 m)
24X005	Fiber Optic Cable, 100 ft (30.5 m)

Models with Bottom Manifolds (Model numbers LA2xxx or HA2xxx)

Part No.	Description
24X006	Fiber Optic Cable, 25 ft (7.6 m)
24X007	Fiber Optic Cable, 50 ft (15 m)
24X008	Fiber Optic Cable, 100 ft (30.5 m)

Fiber Optic Cable Kit

24W875	Parts necessary to replace damaged ends on one cable assembly.

Air Line Accessories

AirFlex™ Flexible Grounded Air Hose (Grey)

100 psi (7 bar, 0.7 MPa) Maximum Working Pressure

0.315 in. (8 mm) ID; 1/4 npsm(f) x 1/4 npsm(f) left-hand thread

Part No.	Description
244963	6 ft (1.8 m)
244964	15 ft (4.6 m)
244965	25 ft (7.6 m)
244966	36 ft (11 m)
244967	50 ft (15 m)
244968	75 ft (23 m)
244969	100 ft (30.5 m)

Standard Grounded Air Hose (Grey)

100 psi (7 bar, 0.7 MPa) Maximum Working Pressure

0.315 in. (8 mm) ID; 1/4 npsm(f) x 1/4 npsm(f) left-hand thread

Part No.	Description
223068	6 ft (1.8 m)
223069	15 ft (4.6 m)
223070	25 ft (7.6 m)
223071	36 ft (11 m)
223072	50 ft (15 m)
223073	75 ft (23 m)
223074	100 ft (30.5 m)

Grounded Air Hose with stainless steel braid ground path (Red)

100 psi (7 bar, 0.7 MPa) Maximum Working Pressure

0.315 in. (8 mm) ID; 1/4 npsm(f) x 1/4 npsm(f) left-hand thread

Part No.	Description
235068	6ft(1.8m)
235069	15 ft (4.6 m)
235070	25 ft (7.6 m)
235071	36 ft (11 m)
235072	50 ft (15 m)
235073	75 ft (23 m)
235074	100 ft (30.5 m)

Bleed-Type Master Air Valve

300 psi (21 bar, 2.1 MPa) Maximum Working Pressure

Relieves air trapped in the air line between this valve and the pump air motor when closed.

Part No.	Description
107141	3/4 npt

Air Line Shutoff Valve

150 psi (10 bar, 1.0 MPa) Maximum Working Pressure

For turning air to gun on or off.

Part No.	Description
224754	1/4 npsm(m) x 1/4 npsm(f) left-hand thread.

Fluid Line Accessories

Fluid Hose

3300 psi (22.7 MPa, 227 bar) Maximum Working Pressure

1/4 in. (6 mm) ID; 1/4 npsm (fbe); nylon.

Part No.	Description
240793	25 ft (7.6 m)
240794	50 ft (15.2 m)

Fluid Recirculation Fitting

5000 psi (340 bar, 34 Mpa) Maximum Working Pressure

Part No.	Description
24X634	Stainless steel recirculation fitting that mounts directly to the gun fluid inlet fitting. 1/4-18 npsm inlet and outlet.

System Accessories

Part No.	Description
222011	Ground wire for grounding pump and other components and equipment in the spray area. 12 gauge, 25 ft (7.6 m).
16P802	English Warning Sign. Available at no charge from Graco.

Test Equipment

Part No.	Description
241079	Megohmmeter. 500 V output, 0.01–2000 megohms. Use for ground continuity and gun resistance tests.Not for use in hazardous areas.
722886	Paint Resistance Meter. Use for fluid resistivity test. See manual 307263. **Not for use in hazardous areas.**
722860	Paint Probe. Use for fluid resistivity test. See manual 307263. **Not for use in hazardous areas.**
245277	Test Fixture, High Voltage Probe, and kV Meter. Use to test the electrostatic voltage of the gun, and the condition of the turbine and power supply when being serviced. See manual 309455. Also requires 24R038 Conversion Kit.
24R038	Voltage Tester Conversion Kit. Converts the 245277 Test Fixture for use with the Pro Xp Gun turbine. See manual 406999.

Miscellaneous Equipment

Gun Accessories

Part No.	Description
105749	Cleaning brush
111265	Non-silicone lubricant, 4 oz (113g)
116553	Dielectric grease 1 oz (30 ml)
24V929	Gun Covers

Conversion and Repair Kits

Part No.	Description
24N319	Round Spray Kit. To convert a standard air assisted spray gun to a round spray air cap. See manual 3A2499.
24W390	Air Seal Repair Kit
24N706	Turbine Bearing Repair Kit

Dimensions

Rear Inlet Manifold

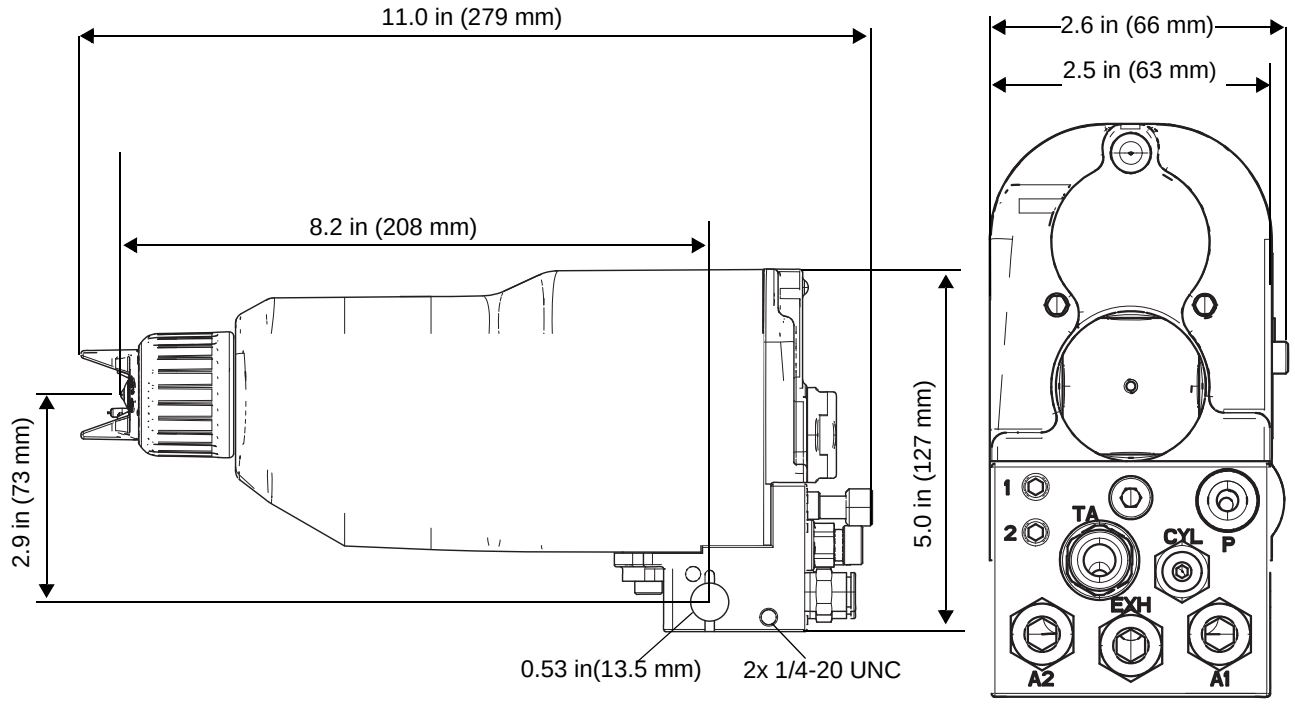

Bottom Inlet Manifold

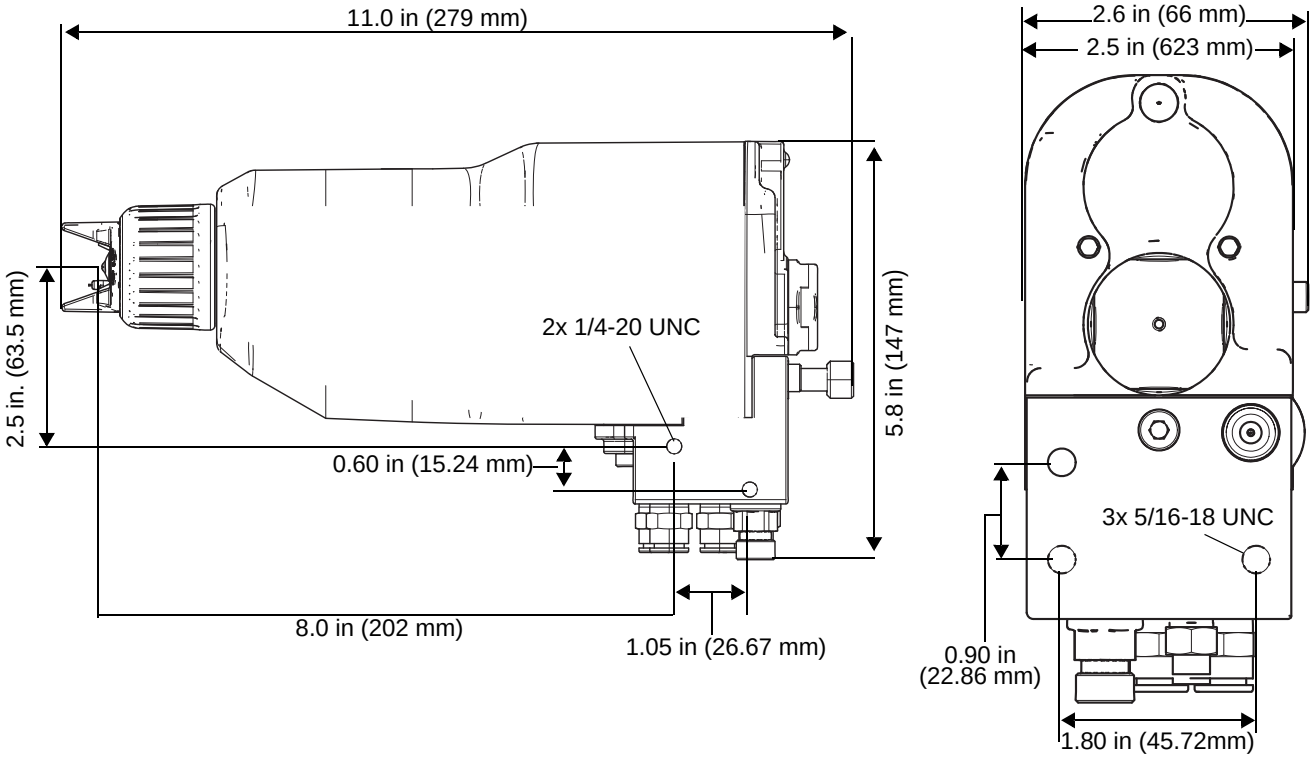

Robot Mount Gun Dimensions

Typical configuration for a hollow-wrist robot with bottom-manifold gun.

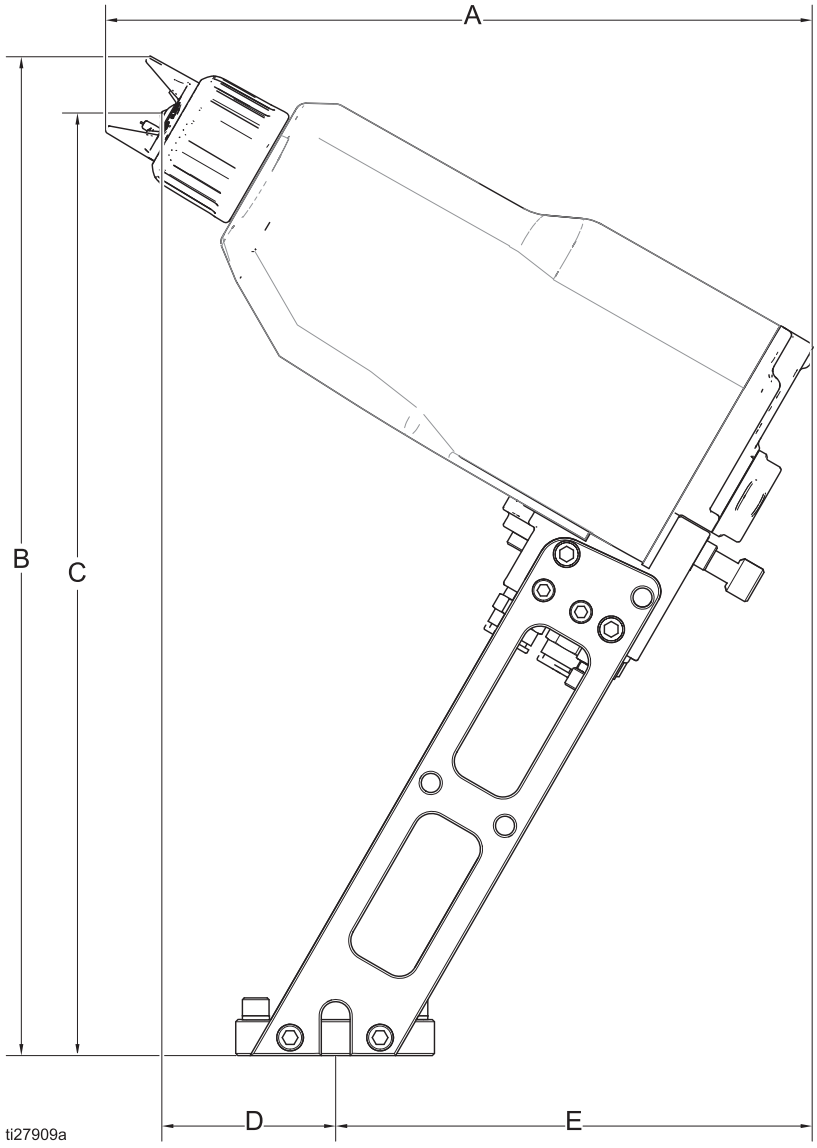

NOTE: Gun shown positioned for 60° spray setting in Robot Mount Bracket 24X820.

FIG. 37. Dimensions, Gun with a Bottom Manifold, 60° Position

A	B	C	D	E
9.8 in. (24.9 cm)	13.9 in. (35.3 cm)	13.1 in. (33.3 cm)	2.4 in. (6.1 cm)	6.7 in. (17.0 cm)

Typical configuration for a hollow-wrist robot with bottom-manifold gun.

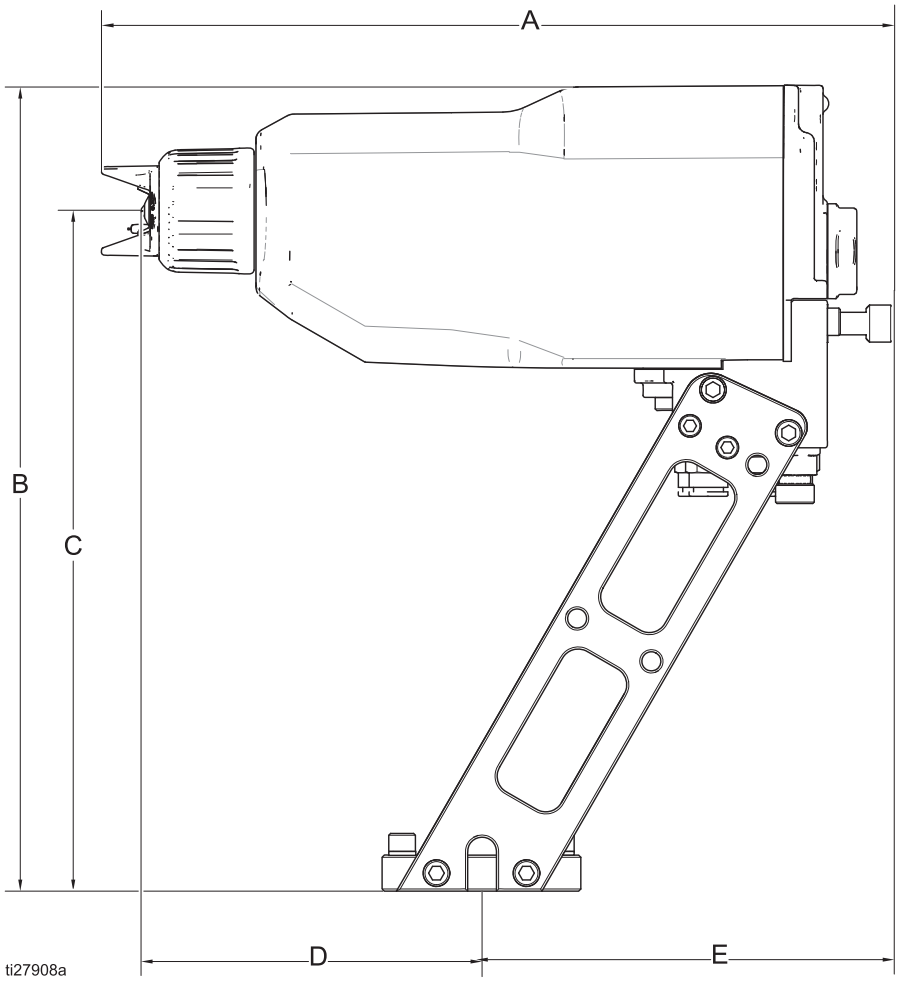

NOTE: Gun shown positioned for 90° spray setting in Robot Mount Bracket 24X820.

FIG. 38. Dimensions, Gun with a Bottom Manifold, 90° Position

A	B	C	D	E
11.0 in. (27.9 cm)	11.2 in. (28.4 cm)	9.5 in. (24.1 cm)	4.7 in. (11.9 cm)	5.7 in. (14.5 cm)

Alternate configuration for a robot with rear-manifold gun.

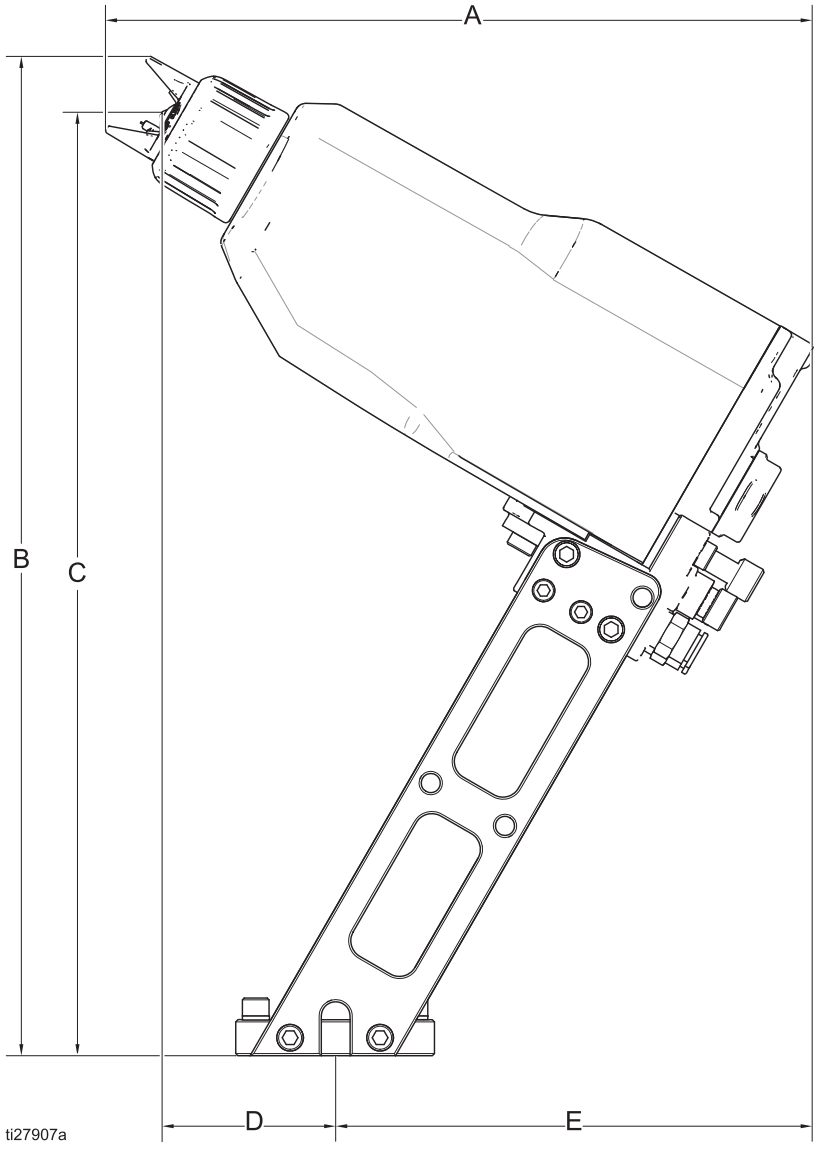

NOTE: Gun shown positioned for 60° spray setting in Robot Mount Bracket 24X820.

FIG. 39. Dimensions, Gun with a Rear Manifold, 60° Position

A	B	C	D	E
9.8 in. (24.9 cm)	13.9 in. (35.3 cm)	13.1 in. (33.3 cm)	2.4 in. (6.1 cm)	6.7 in. (17.0 cm)

Alternate configuration for a robot with rear-manifold gun.

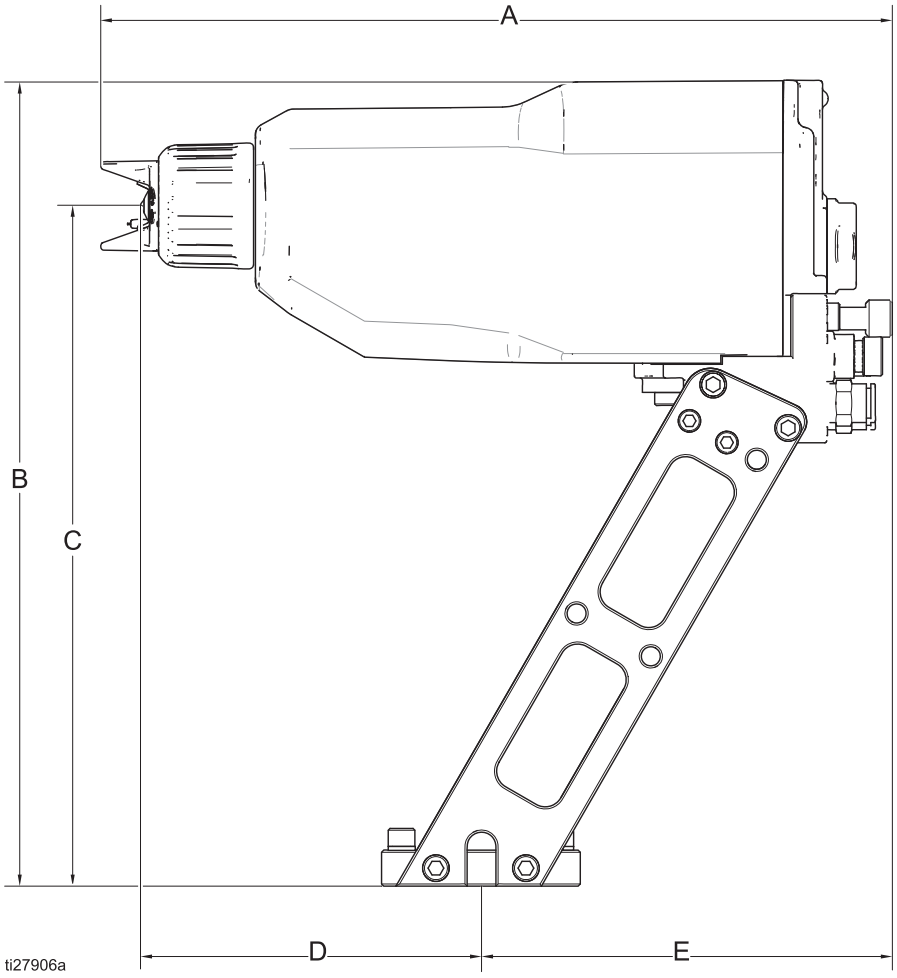

NOTE: Gun shown positioned for 90° spray setting in Robot Mount Bracket 24X820.

FIG. 40. Dimensions, Gun with a Rear Manifold, 90° Position

A	B	C	D	E
11.0 in. (27.9 cm)	11.2 in. (28.4 cm)	9.5 in. (24.1 cm)	4.7 in. (11.9 cm)	5.7 in. (14.5 cm)

Spray Tip Selection Chart

AEM Fine Finish Spray Tips

Recommended for high finish quality applications at low and medium pressures. Order desired tip, Part No. AEMxxx, where xxx = 3-digit number from the matrix below.

Orifice Size in. (mm)	Fluid Output fl oz/min (l/min)		Maximum Pattern Width at 12 in. (305 mm) in. (mm)							
	at 600 psi (4.1 MPa, 41 bar)	at 1000 psi (7.0 MPa, 70 bar)	2 - 4 (50 - 100)	4 - 6 (100 - 150)	6 - 8 (150 - 200)	8 - 10 (200 - 250)	10 - 12 (250 - 300)	12 - 14 (300 - 350)	14 - 16 (350 - 400)	16 - 18 (400 - 450)
			Spray Tip							
0.007 (0.178)	4.0 (0.1)	5.2 (0.15)	107	207	307					
0.009 (0.229)	7.0 (0.2)	9.1 (0.27)		209	309	409	509	609		
0.011 (0.279)	10.0 (0.3)	13.0 (0.4)		211	311	411	511	611	711	
0.013 (0.330)	13.0 (0.4)	16.9 (0.5)		213	313	413	513	613	713	813
0.015 (0.381)	17.0 (0.5)	22.0 (0.7)		215	315	415	515	615	715	815
0.017 (0.432)	22.0 (0.7)	28.5 (0.85)		217	317	417	517	617	717	
0.019 (0.483)	28.0 (0.8)	36.3 (1.09)			319	419	519	619	719	
0.021 (0.533)	35.0 (1.0)	45.4 (1.36)				421	521	621	721	821
0.023 (0.584)	40.0 (1.2)	51.9 (1.56)				423	523	623	723	823
0.025 (0.635)	50.0 (1.5)	64.8 (1.94)				425	525	625	725	825
0.029 (0.736)	68.0 (1.9)	88.2 (2.65)								829
0.031 (0.787)	78.0 (2.2)	101.1 (3.03)				431		631		831
0.033 (0.838)	88.0 (2.5)	114.1 (3.42)								833
0.037 (0.939)	108.0 (3.1)	140.0 (4.20)							737	
0.039 (0.990)	118.0 (3.4)	153.0 (4.59)					539			

* Tips are tested in water.

Fluid output (Q) at other pressures (P) can be calculated by this formula: $Q = (0.041)(QT)\sqrt{P}$ where QT = fluid output (fl oz/min) at 600 psi from the above table for the selected orifice size.

AEF Fine Finish Pre-Orifice Spray Tips

Recommended for high finish quality applications at low and medium pressures. AEF tips have a pre-orifice that assists in atomizing sheer thinning materials, including lacquers.

Order desired tip, Part No. AEFxxx, where xxx = 3-digit number from the matrix below.

Orifice Size in. (mm)	**Fluid Output fl oz/min (l/min)**		**Maximum Pattern Width at 12 in. (305 mm) in. (mm)**					
	at 600 psi (4.1 MPa, 41 bar)	**at 1000 psi (7.0 MPa, 70 bar)**	**6-8 (150 - 200)**	**8-10 (200 - 250)**	**10-12 (250 - 300)**	**12-14 (300 - 350)**	**14-16 (350 - 400)**	**16-18 (400 - 450)**
			Spray Tip					
0.008 (0.203)	8.5 (.025)	11.0 (0.32)	608					
0.010 (0.254)	9.5 (0.28)	12.5 (0.37)	310	410	510	610	710	
0.0012 (0.305)	12.0 (0.35)	16.0 (0.47)	312	412	512	612	712	812
0.014 (0.356)	16.0 (0.47)	21.0 (0.62)	314	414	514	614	714	814
0.016 (0.406)	20.0 (0.59)	26.5 (0.78)		416	516	616	716	

* Tips are tested in water.

Fluid output (Q) at other pressures (P) can be calculated by this formula: Q = (0.041) (QT) $\sqrt{P}$ where QT = fluid output (fl oz/min) at 600 psi from the above table for the selected orifice size.

Air Flow

The gun requires 6 scfm (170 l/min) of turbine air flow (see **Technical Data**). The following graph shows additional air consumption. For example, at 30 psi inlet air pressure, the gun uses about 4 scfm (113 l/min) of atomizing air. Add this amount to the turbine air for a total of 10 scfm (280 l/min) air consumption. Typically, AA guns with correct tip selection will not need additional fan air.

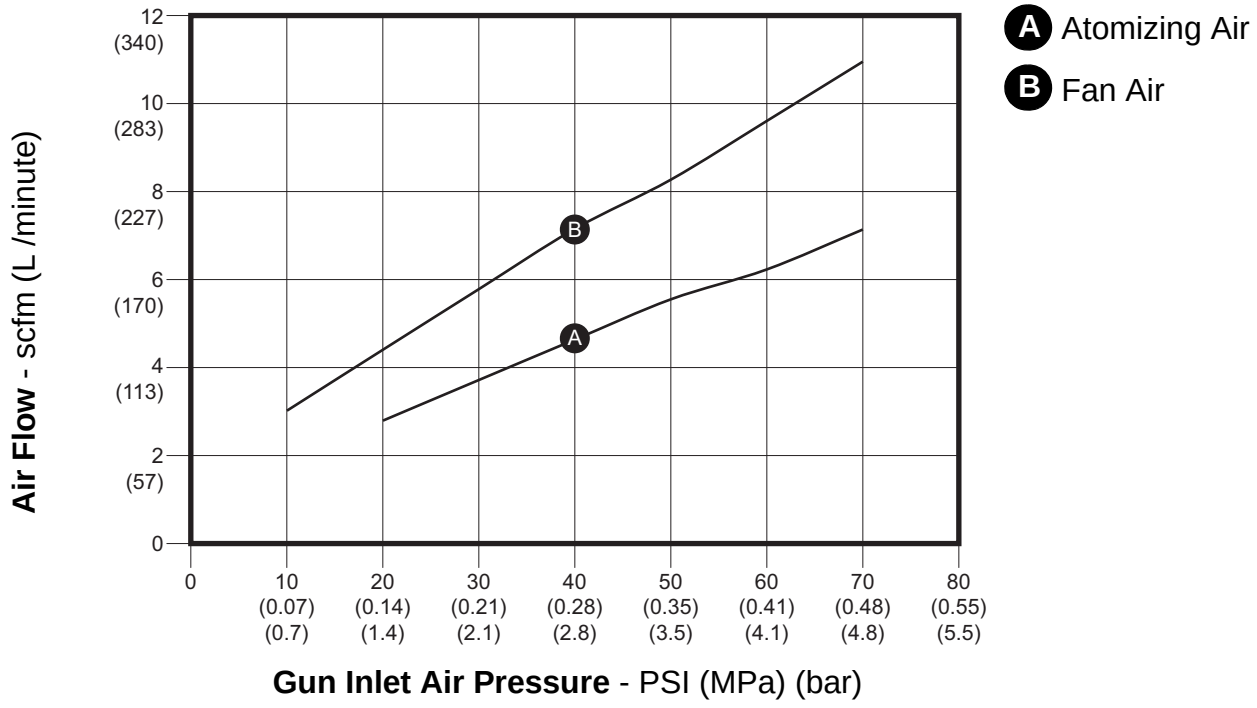

Technical Data

Pro Xp Auto AA Spray Gun		
	US	**Metric**
Maximum fluid working pressure	3000 psi	21 MPa, 210 bar
Maximum working air pressure	100 psi	0.7 MPa, 7 bar
Maximum fluid operating temperature	120°F	48°C
Short circuit current output	125 microamperes	
Paint resistivity range	3 megohm/cm to infinity	
Air Consumption		
Required turbine air flow	6 scfm	170 l/min
Typical total air flow with 30 psi (2 bar) air inlet pressure	10 scfm	280 l/min
Voltage Output		
Standard Models	85 kV	
Smart Models	40-85 kV	
Voltage output	40-85 kV	
Gun Weight (Approximate)	2.7 lb	1.2 kg
Noise (dBa)		
Sound Power (measured per ISO Standard 9216)	at 40 psi: 90.4 dB(A) at 100 psi: 105.4 dB(A)	at 0.28 MPa, 2.8 bar: 90.4 dB(A) at 0.7 MPa, 7 bar: 105.4 dB(A)
Sound Pressure (measured 1 m from gun)	at 40 psi: 87 dB(A) at 100 psi: 99 dB(A)	at 0.28 MPa, 2.8 bar: 87 dB(A) at 0.7 MPa, 7 bar: 99 dB(A)
Inlet/Outlet Sizes		
Turbine air inlet fitting, left-hand thread	1/4 npsm(m)	
Atomizing air inlet fitting	5/16 in. OD nylon tube (8 mm)	
Fan air inlet fitting	5/16 in. OD nylon tube (8 mm)	
Cylinder air inlet fitting	5/32 in. OD nylon tube (4 mm)	
Fluid inlet fitting	1/4-18 npsm(m)	
Materials of Construction		
Wetted Parts	Stainless Steel; Nylon, Acetal, Ultra-High Molecular Weight Polyethylene, Fluoroelastomer, PEEK, Tungsten Carbide, Polyethylene	

Graco Pro Xp Warranty

Graco warrants all equipment referenced in this document which is manufactured by Graco and bearing its name to be free from defects in material and workmanship on the date of sale to the original purchaser for use. With the exception of any special, extended, or limited warranty published by Graco, Graco will, for a period of twelve months from the date of sale, repair or replace any part of the equipment determined by Graco to be defective. However, any deficiency in the barrel, handle, trigger, hook, internal power supply, and alternator (excluding turbine bearings) will be repaired or replaced for thirty-six months from the date of sale. This warranty applies only when the equipment is installed, operated and maintained in accordance with Graco's written recommendations.

This warranty does not cover, and Graco shall not be liable for general wear and tear, or any malfunction, damage or wear caused by faulty installation, misapplication, abrasion, corrosion, inadequate or improper maintenance, negligence, accident, tampering, or substitution of non-Graco component parts. Nor shall Graco be liable for malfunction, damage or wear caused by the incompatibility of Graco equipment with structures, accessories, equipment or materials not supplied by Graco, or the improper design, manufacture, installation, operation or maintenance of structures, accessories, equipment or materials not supplied by Graco.

This warranty is conditioned upon the prepaid return of the equipment claimed to be defective to an authorized Graco distributor for verification of the claimed defect. If the claimed defect is verified, Graco will repair or replace free of charge any defective parts. The equipment will be returned to the original purchaser transportation prepaid. If inspection of the equipment does not disclose any defect in material or workmanship, repairs will be made at a reasonable charge, which charges may include the costs of parts, labor, and transportation.

THIS WARRANTY IS EXCLUSIVE, AND IS IN LIEU OF ANY OTHER WARRANTIES, EXPRESS OR IMPLIED, INCLUDING BUT NOT LIMITED TO WARRANTY OF MERCHANTABILITY OR WARRANTY OF FITNESS FOR A PARTICULAR PURPOSE.

Graco's sole obligation and buyer's sole remedy for any breach of warranty shall be as set forth above. The buyer agrees that no other remedy (including, but not limited to, incidental or consequential damages for lost profits, lost sales, injury to person or property, or any other incidental or consequential loss) shall be available. Any action for breach of warranty must be brought within two (2) years of the date of sale.

GRACO MAKES NO WARRANTY, AND DISCLAIMS ALL IMPLIED WARRANTIES OF MERCHANTABILITY AND FITNESS FOR A PARTICULAR PURPOSE, IN CONNECTION WITH ACCESSORIES, EQUIPMENT, MATERIALS OR COMPONENTS SOLD BUT NOT MANUFACTURED BY GRACO. These items sold, but not manufactured by Graco (such as electric motors, switches, hose, etc.), are subject to the warranty, if any, of their manufacturer. Graco will provide purchaser with reasonable assistance in making any claim for breach of these warranties.

In no event will Graco be liable for indirect, incidental, special or consequential damages resulting from Graco supplying equipment hereunder, or the furnishing, performance, or use of any products or other goods sold hereto, whether due to a breach of contract, breach of warranty, the negligence of Graco, or otherwise.

FOR GRACO CANADA CUSTOMERS
The Parties acknowledge that they have required that the present document, as well as all documents, notices and legal proceedings entered into, given or instituted pursuant hereto or relating directly or indirectly hereto, be drawn up in English. Les parties reconnaissent avoir convenu que la rédaction du présente document sera en Anglais, ainsi que tous documents, avis et procédures judiciaires exécutés, donnés ou intentés, à la suite de ou en rapport, directement ou indirectement, avec les procédures concernées.

Graco Information

For the latest information about Graco products, visit www.graco.com.

For patent information, see www.graco.com/patents.

TO PLACE AN ORDER, contact your Graco distributor or call to identify the nearest distributor.
Phone: 612-623-6921 or Toll Free: 1-800-328-0211 Fax: 612-378-3505

All written and visual data contained in this document reflects the latest product information available at the time of publication.
Graco reserves the right to make changes at any time without notice.

Original instructions. This manual contains English. MM 333011

Graco Headquarters: Minneapolis
International Offices: Belgium, China, Japan, Korea

GRACO INC. AND SUBSIDIARIES • P.O. BOX 1441 • MINNEAPOLIS MN 55440-1441 • USA

Copyright 2014, Graco Inc. All Graco manufacturing locations are registered to ISO 9001.
www.graco.com
Revision E, March 2016