Instructions - Parts

VISCON® HF

High Flow, High Pressure Fluid Heater

3A2954G

EN

For variable heating of viscous fluids.

7250 psi (50 MPa, 500 bar) Maximum Working Pressure

Important Safety Instructions
Read all warnings and instructions in this manual.
Save these instructions.

See page 3 for model numbers, descriptions, and approvals information.

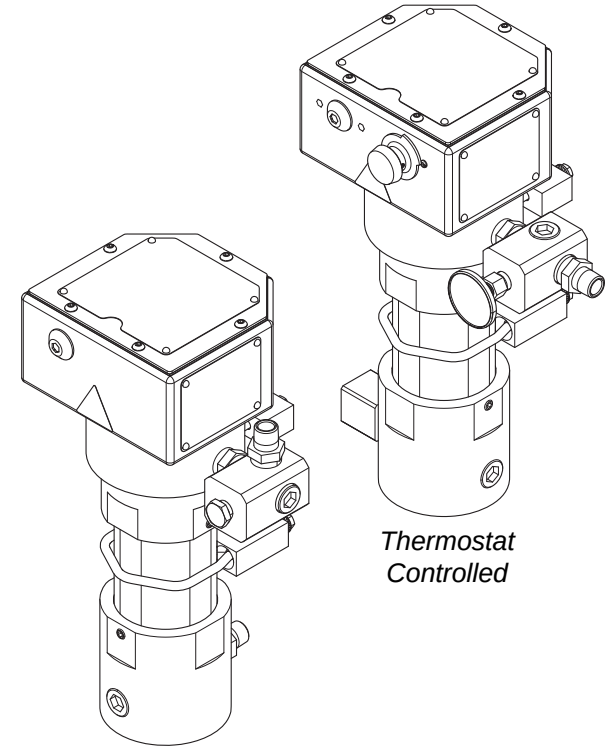

PROVEN QUALITY. LEADING TECHNOLOGY.

Contents

Models

Hazardous Location Heaters

See Special Conditions for Safe Use in **Warnings**, page 4.

Model	Series	Description	VAC (50/60 Hz single phase) / Watts / Amps	Approvals
24W248	A	Thermostat Control	240 / 5400 / 22.5	**9902471** **Certified to CAN/CSA C22.2 No. 88** **Conforms to** **UL 499** ATEX Ratings: **II 2 G Ex db IIB T4 Gb** ATEX Certificate No. ITS14ATEX18155X IECEx Ratings Ex db IIB T4 Gb IECEx Certificate No. IECEx ETL 14.0046X Ta = -20°C to 60°C * For US/CAN: Class 1, Division 1, Groups C, D (T3) Ta = -20°C to 60°C * Applies to 24W248 only See **Technical Data**, page 35, for additional information.
24W612	A	RTD, For Use With External Digital Control	240 / 5400 / 22.5	

Non-Hazardous Location Heaters

Model	Series	Description	VAC (50/60 Hz single phase) / Watts / Amps	Approvals
24P016	C	Thermostat Control	240 / 5400 / 22.5	**9902471** **Certified to CAN/CSA C22.2 No. 88** **Conforms to** **UL 499**
262853	C	RTD, For Use With External Digital Control	240 / 5400 / 22.5	

Warnings

The following warnings are for the setup, use, grounding, maintenance, and repair of this equipment. The exclamation point symbol alerts you to a general warning and the hazard symbols refer to procedure-specific risks. When these symbols appear in the body of this manual or on warning labels, refer back to these Warnings. Product-specific hazard symbols and warnings not covered in this section may appear throughout the body of this manual where applicable.

WARNING

SPECIAL CONDITIONS FOR SAFE USE

- For information on the required dimensions of the flameproof joints contact the holder of this certificate (Graco Inc); Flamepath joints are not intended to be repaired.
- Special fasteners for securing equipment covers shall have a minimum yield strength of 1,100 MPa and be corrosion resistant and sized M8 x 1.25 x 30.
- Models provided with RTD sensors are to be provided with external temperature controller set to not greater than 239°F (115°C).

ELECTRIC SHOCK HAZARD

This equipment must be grounded. Improper grounding, setup, or usage of the system can cause electric shock.

- Turn off and disconnect power at main switch before disconnecting any cables and before servicing or installing equipment.
- Connect only to grounded power source.
- All electrical wiring must be done by a qualified electrician and comply with all local codes and regulations.

BURN HAZARD

Equipment surfaces and fluid that is heated can become very hot during operation. To avoid severe burns:

- Do not touch hot fluid or equipment.

FIRE AND EXPLOSION HAZARD

Flammable fumes, such as solvent and paint fumes, in **work area** can ignite or explode. To help prevent fire and explosion:

- Use equipment only in well ventilated area.
- Eliminate all ignition sources; such as pilot lights, cigarettes, portable electric lamps, and plastic drop cloths (potential static arc).
- Keep work area free of debris, including solvent, rags and gasoline.
- Do not plug or unplug power cords, or turn power or light switches on or off when flammable fumes are present.
- Ground all equipment in the work area. See **Grounding** instructions.
- Use only grounded hoses.
- Hold gun firmly to side of grounded pail when triggering into pail. Do not use pail liners unless they are antistatic or conductive.
- **Stop operation immediately** if static sparking occurs or you feel a shock**.** Do not use equipment until you identify and correct the problem.
- Keep a working fire extinguisher in the work area.
- Never operate with covers removed. Do not open when energized.
- Install conduit within 18 in (457 mm).
- Do not install if operating temperature exceeds ignition temperature of hazardous atmosphere.

WARNING

SKIN INJECTION HAZARD

High-pressure fluid from gun, hose leaks, or ruptured components will pierce skin. This may look like just a cut, but it is a serious injury that can result in amputation. **Get immediate surgical treatment.**

- Do not spray without tip guard and trigger guard installed.
- Engage trigger lock when not spraying.
- Do not point gun at anyone or at any part of the body.
- Do not put your hand over the spray tip.
- Do not stop or deflect leaks with your hand, body, glove, or rag.
- Follow the **Pressure Relief Procedure** when you stop spraying and before cleaning, checking, or servicing equipment.
- Tighten all fluid connections before operating the equipment.
- Check hoses and couplings daily. Replace worn or damaged parts immediately.

TOXIC FLUID OR FUMES HAZARD

Toxic fluids or fumes can cause serious injury or death if splashed in the eyes or on skin, inhaled, or swallowed.

- Read MSDSs to know the specific hazards of the fluids you are using.
- Store hazardous fluid in approved containers, and dispose of it according to applicable guidelines.

PERSONAL PROTECTIVE EQUIPMENT

Wear appropriate protective equipment when in the work area to help prevent serious injury, including eye injury, hearing loss, inhalation of toxic fumes, and burns. This protective equipment includes but is not limited to:

- Protective eyewear, and hearing protection.
- Respirators, protective clothing, and gloves as recommended by the fluid and solvent manufacturer

EQUIPMENT MISUSE HAZARD

Misuse can cause death or serious injury.

- Do not operate the unit when fatigued or under the influence of drugs or alcohol.
- Do not exceed the maximum working pressure or temperature rating of the lowest rated system component. See **Technical Data** in all equipment manuals.
- Use fluids and solvents that are compatible with equipment wetted parts. See Technical Data in all equipment manuals. Read fluid and solvent manufacturer's warnings. For complete information about your material, request MSDS from distributor or retailer.
- Do not leave the work area while equipment is energized or under pressure.
- Turn off all equipment and follow the **Pressure Relief Procedure** when equipment is not in use.
- Check equipment daily. Repair or replace worn or damaged parts immediately with genuine manufacturer's replacement parts only.
- Do not alter or modify equipment. Alterations or modifications may void agency approvals and create safety hazards.
- Make sure all equipment is rated and approved for the environment in which you are using it.
- Use equipment only for its intended purpose. Call your distributor for information.
- Route hoses and cables away from traffic areas, sharp edges, moving parts, and hot surfaces.
- Do not kink or over bend hoses or use hoses to pull equipment.
- Keep children and animals away from work area.
- Comply with all applicable safety regulations.

WARNING

PRESSURIZED ALUMINUM PARTS HAZARD

Use of fluids that are incompatible with aluminum in pressurized equipment can cause serious chemical reaction and equipment rupture. Failure to follow this warning can result in death, serious injury, or property damage.

- Do not use 1,1,1-trichloroethane, methylene chloride, other halogenated hydrocarbon solvents or fluids containing such solvents.
- Many other fluids may contain chemicals that can react with aluminum. Contact your material supplier for compatibility.

THERMAL EXPANSION HAZARD

Fluids subjected to heat in confined spaces, including hoses, can create a rapid rise in pressure due to the thermal expansion. Over-pressurization can result in equipment rupture and serious injury.

- Open a valve to relieve the fluid expansion during heating.
- Replace hoses proactively at regular intervals based on your operating conditions.

Installation

Typical Installation Drawing

The typical installation drawing is only a guide. Your Graco distributor can assist in designing your system.

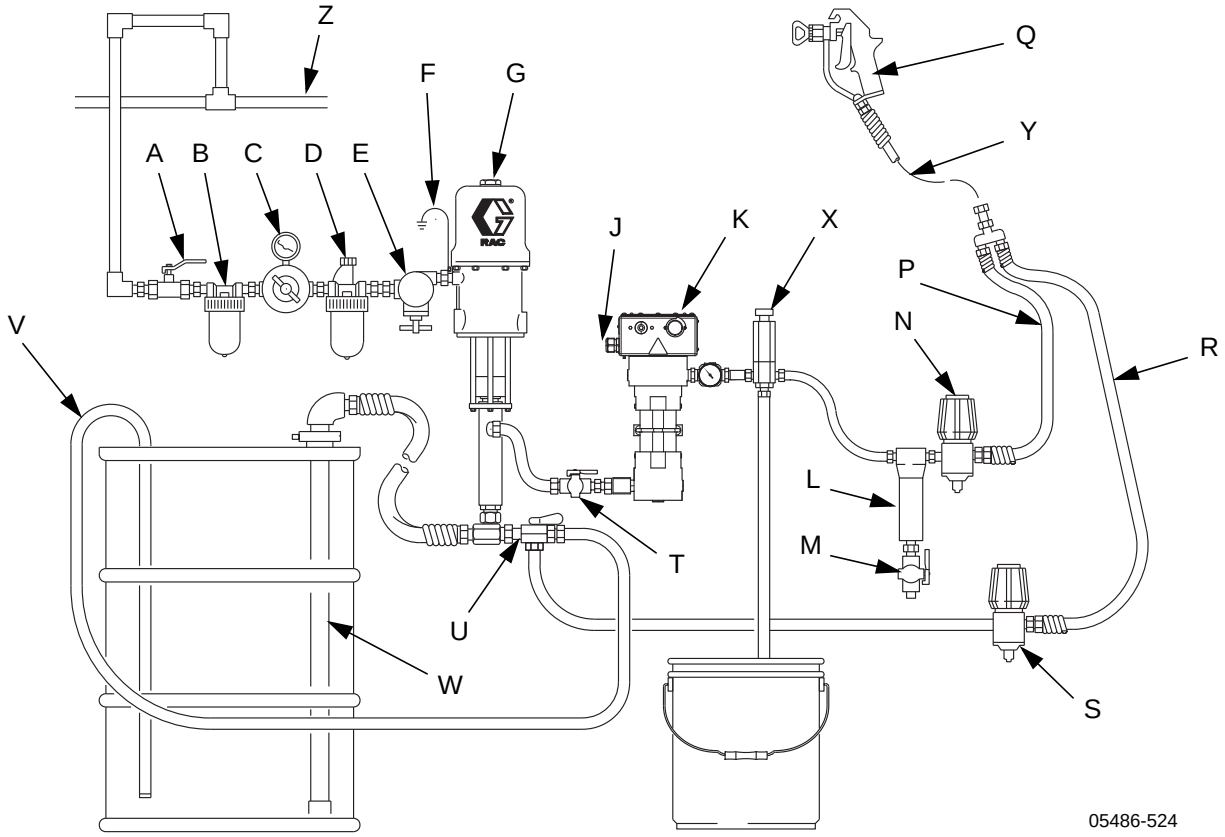

Key:

A	Bleed-type Master Air Valve	K	Heater	T	Fluid Shutoff Valve
B	Air Filter	L	Fluid Filter	U	Director Valve
C	Air Regulator and Gauge	M	Drain Valve	V	Drain Back Tube
D	Air Line Lubricator	N	Fluid Pressure Regulator	W	Suction Tube
E	Pump Runaway Valve	P	Fluid Supply Line	X	Pressure Relief Valve
F	Ground Wire	Q	Spray Gun	Y	Whip End Hose
G	Pump	R	Fluid Return Line	Z	Air Supply Line
J	Power Cable (not shown)	S	Back Pressure Valve		

FIG. 1: Typical Installation – Heated Circulating System

Component Identification

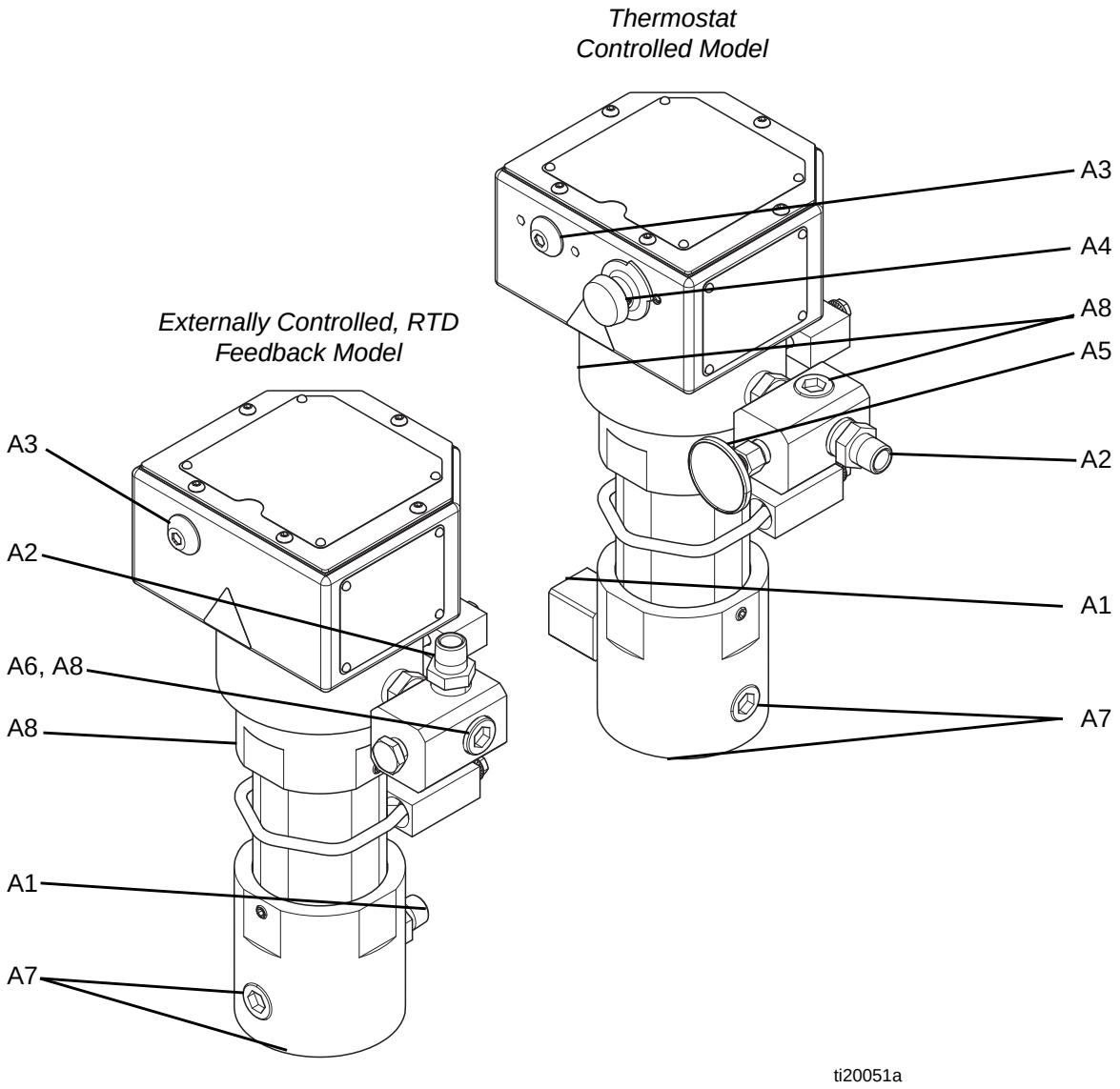

Key:

A1 Fluid Inlet
A2 Fluid Outlet
A3 Heater ON Indicator Light
A4 Temperature Control Knob (24P016 and 24W248 Only)
A5 Temperature Gauge (24P016 and 24W248 Only)
A6 Optional External RTD Feedback Port (262853 and 24W612 Only)
A7 Optional Inlet Ports (front and bottom)
A8 Optional Outlet Ports (one on outlet manifold and one on opposite side of heater)

General Information

- Select system components that meet temperature and pressure ratings listed in **Technical Data**, page 35. The heater's normal output range is adjustable from 84-220°F (29-104°C).
- To prevent fire and explosion, locate heater away from all flammable materials and where operators will not come in contact with hot metal surfaces.
- To avoid burns, insulate and/or label lines and components exiting heater that may become hot.

NOTICE

The inlet fluid temperature cannot exceed 275°F (135°C). This will cause the heater to exceed its rated temperature code.

Selecting Tubing

Fluid loses some heat through the tubing or hose between the heater and spray gun. Locate heater close to the spray area to minimize heat loss through plumbing.

The chart in FIG. 2 shows a heat loss curve for 3 common types of tubing.

Chart Notes:

- Higher flow rates have less heat loss.
- Foam-insulated steel tubing and high pressure airless paint hose retain heat best. Insulated tubing and hose are more expensive, but higher costs are commonly offset by lower operating costs.

Heat Loss Curve: 70°F (21°C) Ambient

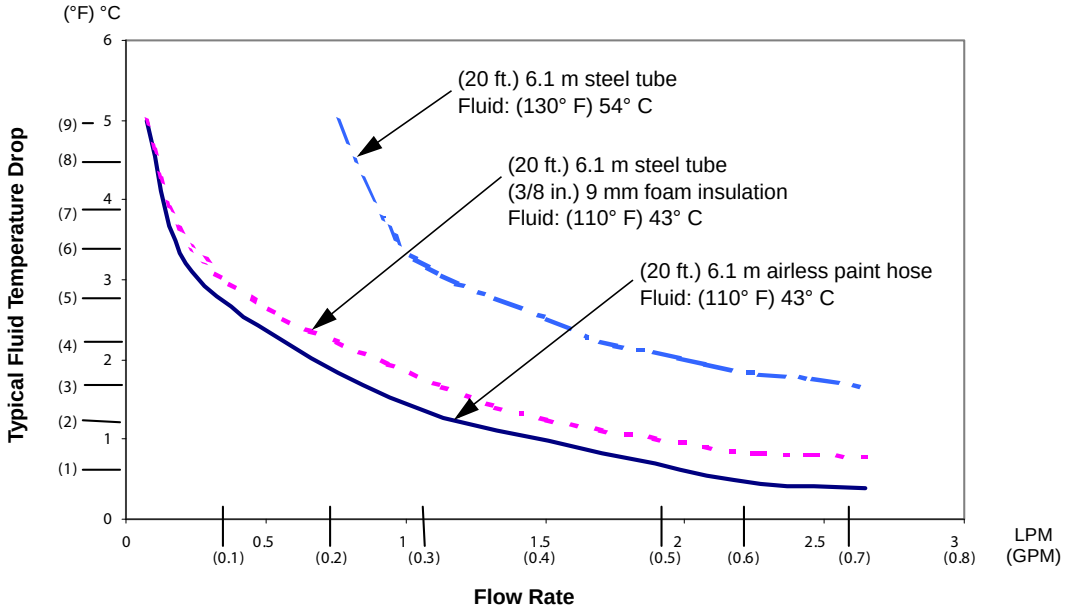

FIG. 2: Typical Temperature Drop

Mounting Heater

NOTE: The Viscon HF heaters will mount anywhere a Viscon HP heater was previously mounted. See the dimensions listed for accessory bracket 192585 on page 34 and the heater dimensions shown on page 37.

NOTE: Heater controls must be easily accessible.

NOTE: The mounting surface must be able to support the weight of the heater and fluid and any stress caused during operation.

Wall Mounting

NOTE: Use wall bracket as a template to mark bolt holes.

Accessory Bracket 192585

(FIG. 3)

1. Use lockwashers and M8 bolts (AA) of appropriate length, not supplied, to mount bracket.
2. Install two screws (74) through spacer block and into top two heater mounting holes until they are about 1/8 in. (3 mm) from fully installed.
3. Lift heater and slide two screw heads into bracket slots.
4. Install u-bracket (78) around heater and install remaining 2 nuts (90). Tighten all nuts and bolts.

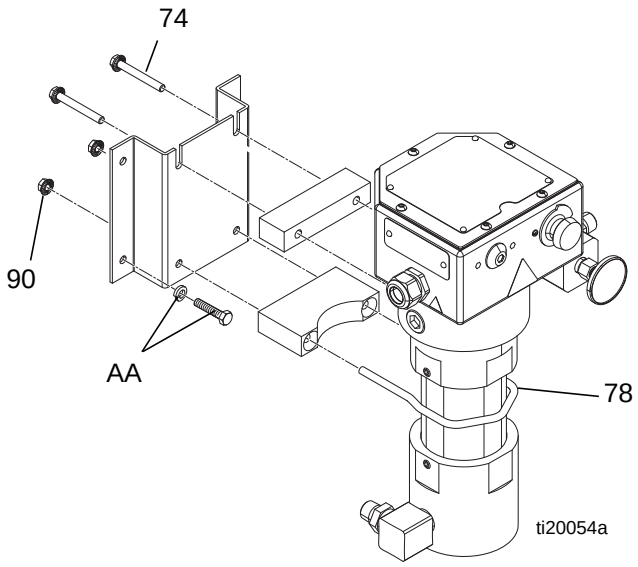

FIG. 3: Accessory Bracket 192585

Cart Mounting

(FIG. 4)

NOTE: For a 2.5 in. square tube frame cart you need to have 2 each of cart mounting bar 183485 (CC) and clamp 183484 (BB). See **Accessories**, page 34, to order.

Place clamps (BB) around the cart vertical post (DD) and secure to the heater mounting bars (CC) with bolts (74) and nuts (90).

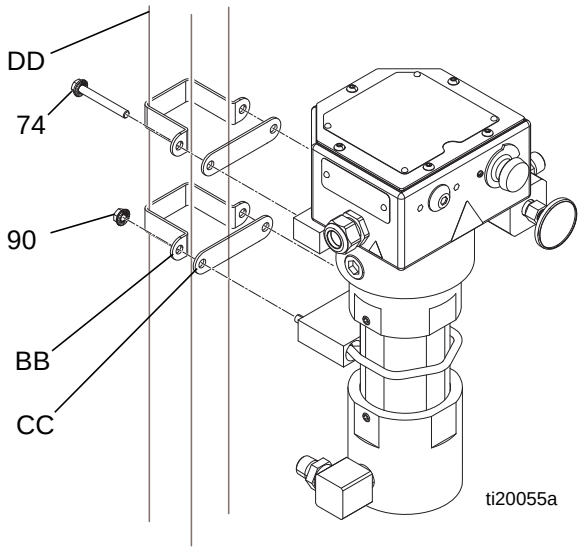

FIG. 4

Fluid Connections and Accessories

(FIG. 5)

1. Install a fluid shutoff valve (T) in the heater's 3/4 in. npt(m) fluid inlet. Do not overtighten. Connect the fluid supply line to the valve.

To prevent serious injury caused by component or equipment rupture:

- Never install a shutoff device between the heater and gun as this will trap the heated fluid and not allow for expansion.
- Never use a fluid regulator as a shutoff device if it is installed between the heater and gun
- Provide a means for adequately handling fluid expansion caused by heat.

To handle fluid expansion caused by heat:

- Use flexible hoses between heater and gun.
- Install a properly sized accumulator downstream from the heater.
- Install a pressure relief valve (X) pre-set to relieve pressure when it exceeds the system maximum working pressure.

2. If feeding an airless spray gun, install a fluid filter (L), drain valve (M), and fluid pressure regulator (N) near the heater's 3/4-14 npt(f) fluid outlet. Then connect the fluid outlet line.

NOTICE

The RTD sensor must always be mounted on the outlet side of housing (67). If you plumb the outlet to the left side, swap position of sensor (88) and plug (82).

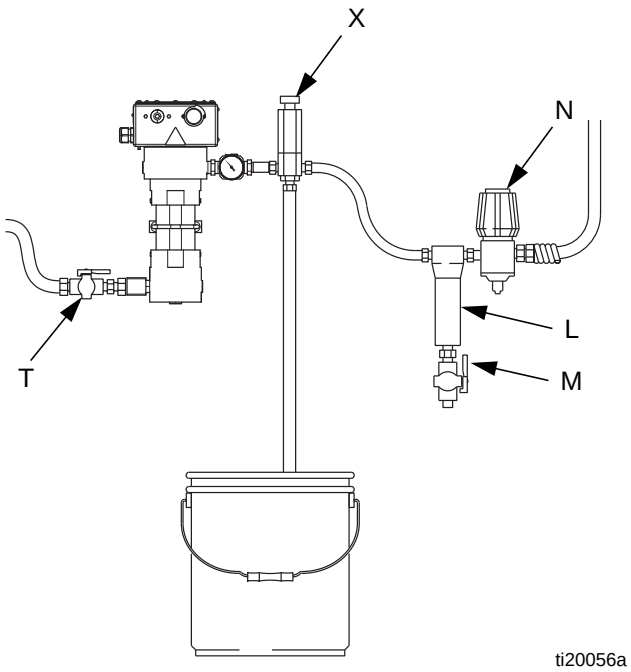

FIG. 5: Fluid Connections and Accessories

Electrical Connections

Heater installation must be in compliance with all applicable local codes and regulations. This equipment must be grounded. Improper grounding, setup, or usage of the system can cause electric shock. All electrical wiring must be done by a qualified electrician and comply with all local codes and regulations.

NOTICE

To help prevent damage, avoid spilling liquids onto electrical components and never operate with the cover removed or screws missing.

Requirements For All Installations

- The power supply must not exceed heater voltage and amperage. See **Models**, page 3.
- Conductors used for supply connection must be suitable for at least 221°F (105°C). An intermediate Type “e” junction may be required.
- Branch circuit breaker over-current protection must be used. The recommended branch circuit breaker size is 30 amps.
- Connections are made through the strain relief cord grip (87). It will accept cords with an outside diameter of 0.51-0.71 in. (13-18 mm).
- Make your ground connection to the green ground lug inside the control head.
- For 24W248 and 24W612 only: Make your power connections to the two post bushings in the control head. Refer to the applicable schematic on page 19. Power entry should be connected through the 3/4 in. npt port. For 24W612 only, the RTD entry should be connected through the 1/2 in. npt port.

RTD Temperature Connection

(Model 262853 and 24W612 Only)

Models provided with RTD sensors are to be provided with external temperature controller set to not greater than 239°F (115°C).

A separate smaller cord grip is provided to bring a cable and connector into the M8 4-pin connection inside the heater. Refer to the applicable schematic on page 19 and the **Technical Data** on page 35.

Grounding

The equipment must be grounded to reduce the risk of static sparking and electric shock. Electric or static sparking can cause fumes to ignite or explode. Improper grounding can cause electric shock. Grounding provides an escape wire for the electric current.

Wire the heater to a properly grounded power supply through the electrical connections and grounding screw (8). In a mobile installation, also ground the truck or trailer to a true earth ground.

Hazardous Area Cabling and Conduit Requirements

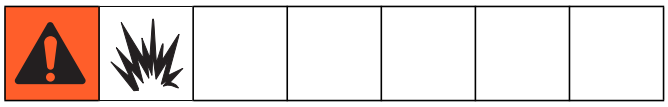

Explosion Proof

All electrical wiring in the hazardous area must be encased in Class I, Division I, Groups C1 and D approved explosion-proof conduit. Follow all National, State, and Local electric codes.

A conduit seal (D) is required within 18 in. (457 mm) of the heater for the US and Canada. All cables must be rated at 221°F (105°C).

Flame Proof (ATEX)

Use appropriate conduit, connectors, and cable glands rated for ATEX II 2 G. Follow all National, State, and Local electric codes. All cable glands and cables must be rated at 221°F (105°C).

Operation

Pressure Relief Procedure

Follow the Pressure Relief Procedure whenever you see this symbol.

This equipment stays pressurized until pressure is manually relieved. To help prevent serious injury from pressurized fluid, such as skin injection, and splashing fluid, follow the Pressure Relief Procedure when you stop spraying and before cleaning, checking, or servicing the equipment.

Follow **Pressure Relief Procedure** when you stop spraying, and before cleaning, checking, or servicing equipment.

1. Engage the gun trigger lock.
2. Shut off main power to the heater.
3. Circulate fluid for at least 10 minutes to cool the heated fluid and heater.
4. Shut off all air and fluid supplies.
5. Disengage the gun trigger lock.
6. Hold a metal part of the gun firmly to a grounded metal pail, and trigger the gun to relieve pressure.
7. Engage the gun trigger lock.

Initial Flushing

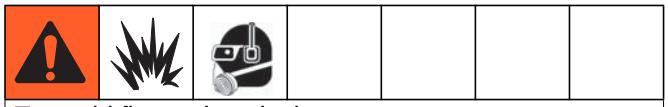

To avoid fire and explosion:

- Flush equipment only in a well-ventilated area
- Ensure main power is off and heater is cool before flushing
- Do not turn on heater until fluid lines are clear of solvent

The heater was tested with lightweight oil, which needs to be flushed out before using the equipment. Use a compatible solvent, and follow flushing instructions in your fluid supply and spray gun manual.

Priming System

(Refer to FIG. 1, page 7)

NOTICE

To prevent damage, do not turn on heater until system is fully primed.

1. Do not turn on the heater yet.
2. If using an airless spray gun, do not install a spray tip yet.
3. Start the pump according to the instructions supplied with it.
4. Turn the system director valve (U) to circulate, and circulate fluid for several minutes.
5. Open the spray gun (Q) at the last outlet to prime the line. Repeat for all gun stations.
6. Engage the gun trigger lock.
7. Shut off the air supply to the pump.
8. Perform **Pressure Relief Procedure**.
9. Install the gun spray tip.

Setting Heater Control

(Refer to FIG. 6)
This procedure applies to model 24P016 only. Heater 262853 with RTD control has no adjustments to make on the heater, it requires use of an external temperature controller.

1. Set the heater control knob (33) to a trial setpoint of 4 or 5.
2. Start the pump and circulate fluid through the system at a very low flow rate of about 10-12 oz/min (0.30-0.35 liter/min).
3. After the indicator light turns off: read the temperature on the thermometer (2). If it does not match the desired temperature, adjust the setpoint.

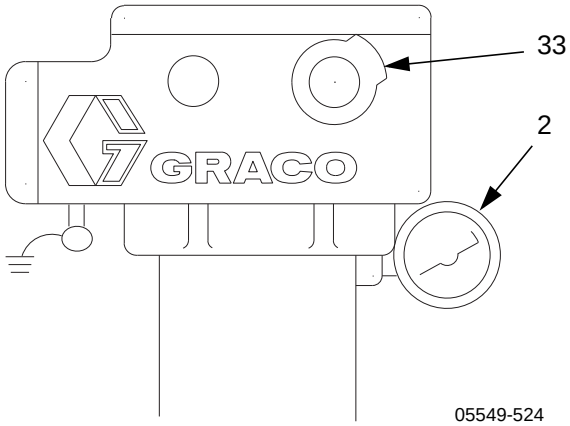

FIG. 6: Setting Heater Control

Adjusting for Spraying

NOTICE

Operating the heater at its highest setting of over 180°F (82°C) for long periods of time decreases the heater life and can cause fluid to dry out which can cause heater clogging and a poor spray pattern.

1. Adjust pump pressure and heater setpoint to the lowest settings needed for good fluid atomization.
2. Set all system back pressure valves (S - FIG. 1 on page 7) to maintain even fluid pressure at all gun stations.

Maintenance

Flushing

To avoid fire and explosion:

- Flush equipment only in a well-ventilated area
- Ensure main power is off and heater is cool before flushing
- Do not turn on heater until fluid lines are clear of solvent

Clogged fluid passages reduce heating efficiency, flow rate, and pressure. Flush or clean whenever a change in heating efficiency, flow rate, or pressure is noticed.

1. Follow **Pressure Relief Procedure**, page 14.
2. Ensure main power is off and heater is cool before flushing. Use a compatible solvent, and follow flushing instructions in your fluid supply and spray gun manual. **Do not turn on heater until fluid lines are clear of solvent.**

Drain the Heater

(FIG. 7)

1. Follow **Pressure Relief Procedure**, page 14.
2. Remove heater inlet and outlet fittings or pipe plugs. Have a container ready to catch the fluid.

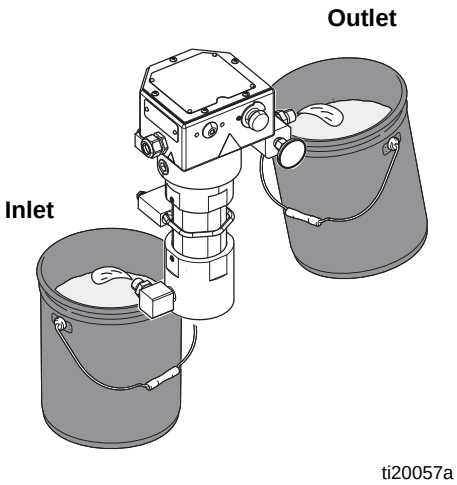

FIG. 7: Drain the Heater

Troubleshooting

Problem	Cause	Solution
Heater will not heat.	No current.	Check circuit and fuses.
	Overtemperature switch (10) tripped.	• Check continuity of overtemperature switch. If circuit is open, press red reset switch and re-check. Determine why switch opened before restarting. • *Model 24P016 and 24W248 only:* check that the thermostat (24) is open when the knob is turned to the left and closed when turned to the right.
	Burned out heater cartridges (81).	Replace cartridges.
Temperature too low.	Fluid requires more warm-up time.	Increase warm-up time.
	Wrong temperature setting.	Adjust setting, page 15.
	Flow rate too high.	Reduce flow rate or use 2 heaters.
	Clogged fluid passages.	**Replace Heater Core and Unclog Fluid Passage**, page 23.
	One of the two heater cartridges (81) failed.	Check each cartridge for a resistance of approximately 21 ohms. The pair in parallel should have a resistance of approximately 10.7 ohms. See **Heater Cartridges** on page 24.
Temperature too high.	Wrong temperature setting.	Adjust setting, page 15.
	Failed primary thermostat (24).	Replace, page 20.
High fluctuating temperatures, about 220-250°F (104-120°C) at 0.1 GPM.	Primary thermostat (24) contacts sticking.	Replace thermostat (24), page 20.
Too much pressure drop or fluid will not flow.	Flow rate too high.	Reduce flow rate or use 2 heaters.
	Clogged fluid passages.	Flush or clean, page 16.
Heater fittings leak.	Loose or damaged fittings.	Tighten or replace fittings.
Heater temperature rises far beyond the setpoint temperature during heating	*Model 262853 and 24W612 Only:* RTD sensor (88) is installed too far into fluid path. Sensor does not sense aluminum core.	Replace sensor (88) and compression fitting (72). See page 25.
	Heater core is dirty or has baked on material.	Disassemble and clean all parts that come in contact with material.

NOTE: See the **Parts** illustration that applies to your heater on page 26 or 28.

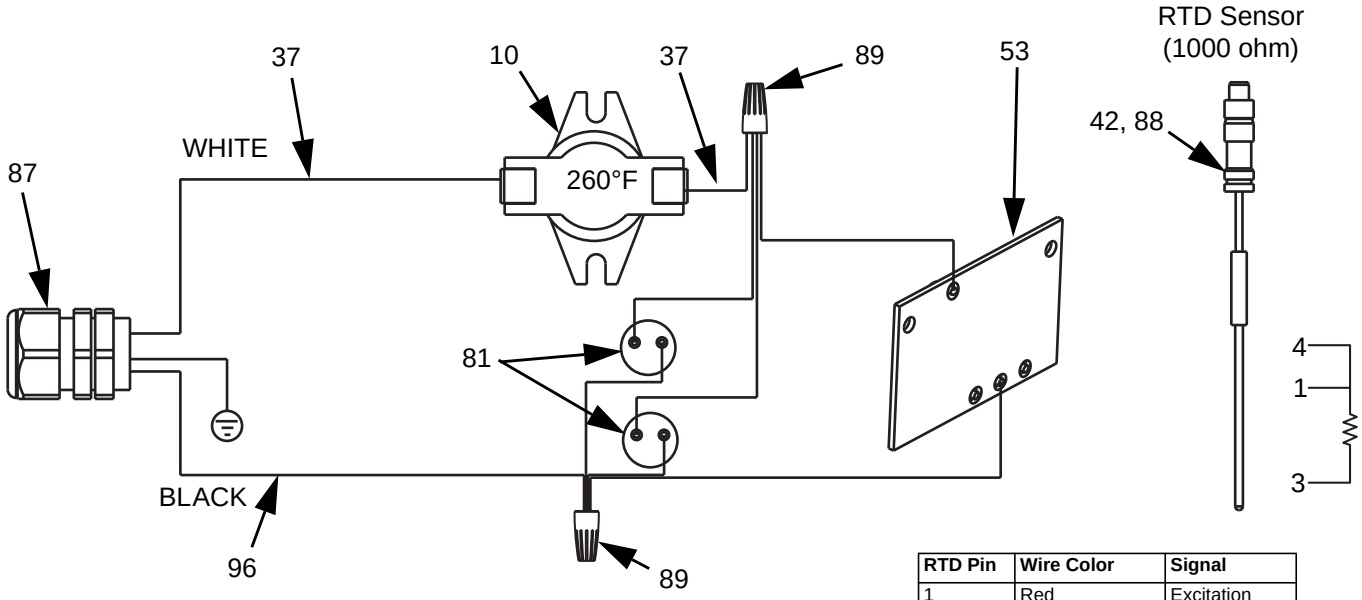

RTD Pin	Wire Color	Signal
1	Red	Excitation
2	---	---
3	White	RTD Element
4	Red	Lead Ohms

FIG. 8: Electrical Schematic - 262853, 24W612 Heater with RTD

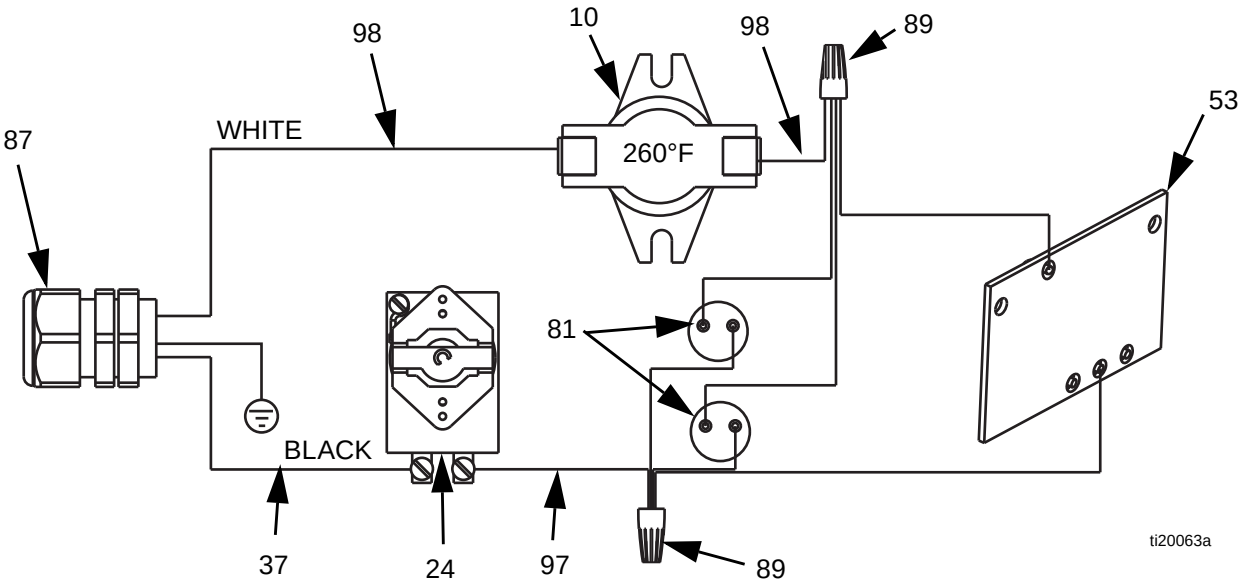

FIG. 9: Electrical Schematic - 24P016, 24W248 Heater with Thermostat

Repair

To avoid burns, electric shock, and skin injection, make sure the main power is OFF, heater is cool, and pressure is relieved before repairing.

Thermostat & Probe

(Model 24P016 and 24W248 only, see FIG. 10 on page 21)

1. Perform **Pressure Relief Procedure**, page 14.
2. Remove screws (52) then remove housing cover (18).
3. Loosen screws (25) that secure thermostat in place.
4. Remove wires from the thermostat terminals (FF).
5. Loosen setscrew (26) in switch shaft (28)
6. Pull thermostat probe (EE) out of heater block.
7. Remove thermostat (24) from housing (1).
8. Remove screw standoff (35) with washer (27).
9. Remove bracket from thermostat (24) and secure to new thermostat.

NOTICE

To avoid damaging capillary tube (GG) of the thermostat, which can cause heater malfunction, do not kink or nick the tube.

To avoid shorting out the heater, do not allow capillary tube to contact the terminals on switch (10) or thermostat (24). Follow step 10, below.

10. Liberally apply thermal lubricant (part no. 110009) to probe (EE) of new thermostat (24). Loop capillary tube (GG) several times and wrap the loops with tie strap (42-not shown). Insert probe in the heater block.
11. Continue reassembling in reverse order of disassembly. See the following **Reassembly Notes** section.

Overtemperature Switch

NOTE: This switch is a manual reset type. Press the red button to reset the switch. Check for continuity across the contacts. If the switch tripped, always determine the cause before returning the heater to service.

1. Follow **Pressure Relief Procedure**, page 14.
2. Remove screws (52) then remove housing cover (18).
3. Unplug wires from tabs (HH) on switch.
4. Remove the two screws (16) securing the switch then remove the switch (10).
5. Liberally apply thermal lubricant (part no. 110009) to the bottom of the thermostat switch and reinstall it in reverse order of disassembly.

Reassembly Notes

- Refer to FIG. 9 or FIG. 8 for wiring connections.
- Make sure gasket (47) is installed and aligned with electrical housing screw holes.
- Secure cover (18) with screws (52). Torque screws to 89 in-lb (10 N•m).

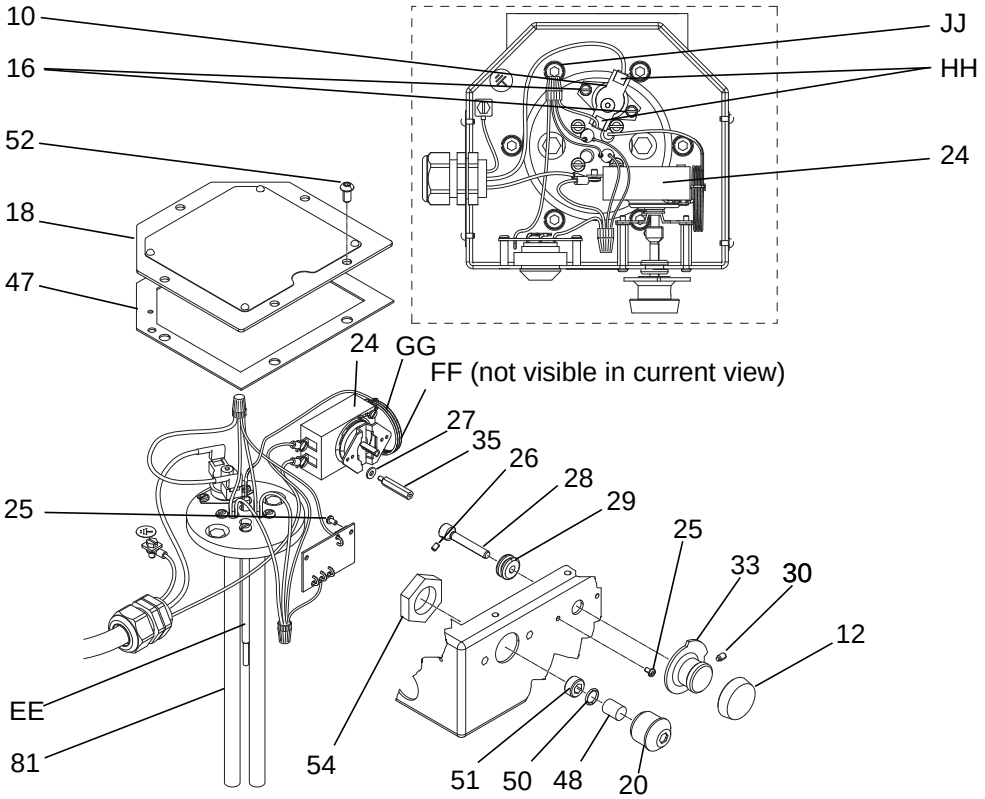

FIG. 10: Thermostat Repair - 24P016

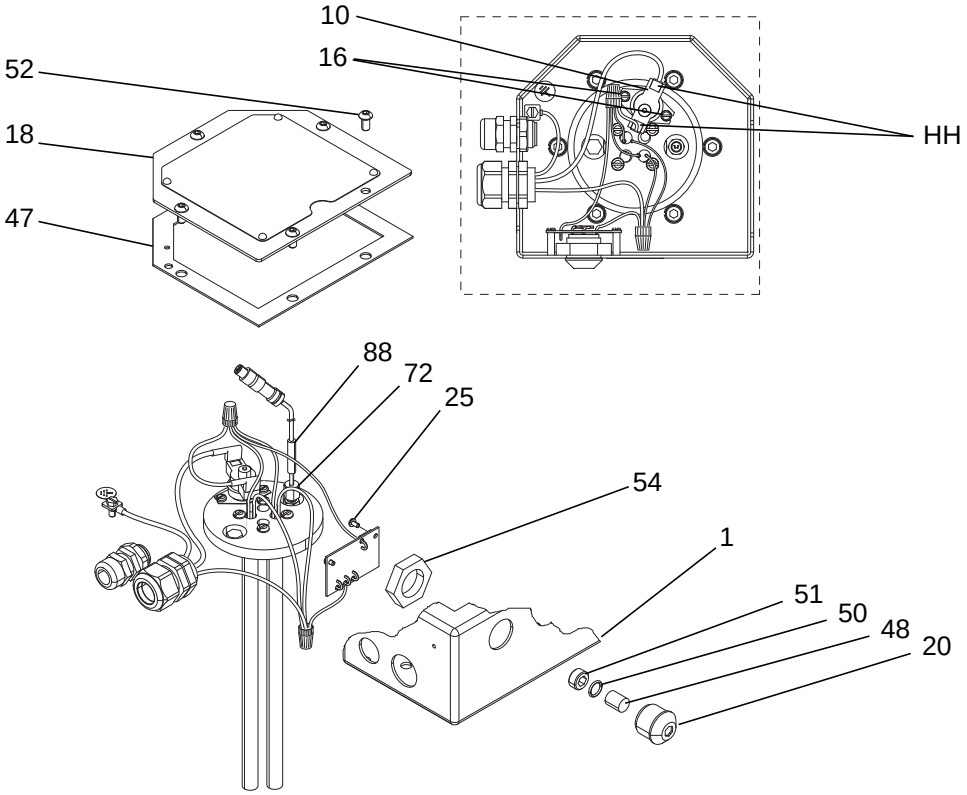

FIG. 11: Sensor Repair - 262853

Control Knob

This procedure applies to heater 24P016 and 24W248 only. See the **Parts** illustration on page 26.

1. Follow **Pressure Relief Procedure**, page 14.
2. Turn control knob (33) to setpoint 1.
3. Loosen the control knob setscrew (30).
4. Remove control knob.
5. Remove adjusting knob (12) from the control knob and press fit it onto the new control knob. Check the grommet (29) and replace if worn.
6. Position new knob so setpoint 1 aligns with the 12 o’clock position and the knob is about 1/16 in. (1 mm) away from the housing. Install and tighten setscrew (30).

Replace Heater Core and Unclog Fluid Passage

The heater core (68) can be removed for thorough cleaning or replacement. See the **Parts** illustration that applies to your heater on page 26 or 28.

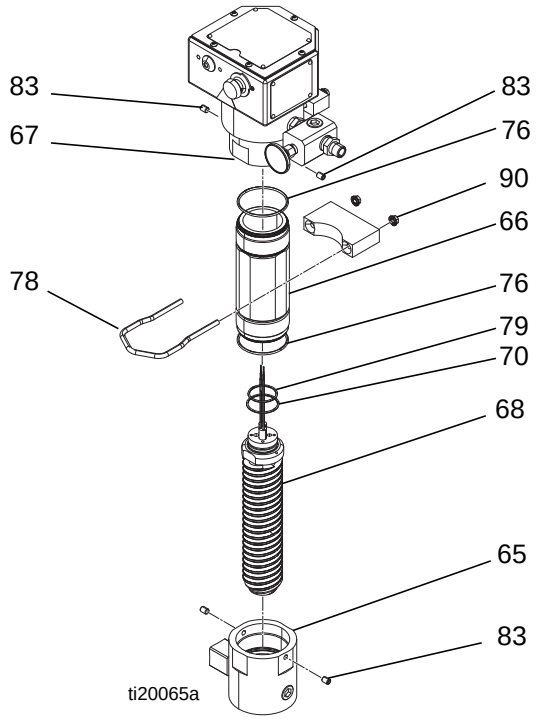

FIG. 12

1. Follow **Pressure Relief Procedure**, page 14.
2. Disconnect power.
3. Wait for system to cool.
4. **Drain the Heater**, page 16.
5. Loosen set screws (83) from bottom inlet housing with a 3/16 in. hex key.
6. Unscrew bottom inlet housing (65).
7. Remove nuts (90) then remove cylinder u-bolt clamp (78).
8. Loosen set screws (83) on upper fluid housing (67).

NOTICE
On model 262853 and 24W612 Only, to prevent damaging the RTD sensor (72), do not rotate the core (68) when performing the following step.

9. Unscrew cylinder (66). Pull down to remove.
10. Remove screws (52) then remove cover (18).
11. *On model 262853 and 24W612 Only,* remove RTD sensor (88). Loosen nut on compression fitting (72). Pull nut and sensor straight up out of heater.
12. Remove 4 screws (71) from top of plate (69).
13. Disconnect heater cartridge (81) wire leads from wire nuts (89).

NOTICE
To prevent damage to sensors and wiring, do not turn core (68). The core pushes straight down out of housing (67).

14. Pull heater core straight down out of the upper housing (67).
15. Use a wire brush to clean outside fluid passages until bare aluminum is visible.

NOTE: *Model 24P016 and 24W248 Only:* The capillary bulb/tube from the thermostat (24) will slowly pull out of its hole in the core (68). The heater core wires will pull down through plate (69).

Reassembly Notes

- Always replace o-rings (70, 76, and 79).
- Refer to FIG. 10 or FIG. 11 on page 21 for wiring connections.
- *Model 262853 and 24W612 Only:* Make sure the core (68) is aligned with the plug (82) pin in housing (67).
- Make sure gasket (47) is installed and aligned with electrical housing screw holes.
- Secure cover (18) with screws (52). Torque screws to 85-90 in-lb (10 N•m).

Heater Cartridges

See **Parts** illustration that applies to your heater on page 26 or 28.

1. Follow **Pressure Relief Procedure**, page 14.
2. Disconnect power.
3. **Drain the Heater**, page 16.
4. Perform **Replace Heater Core and Unclog Fluid Passage** procedure on page 23. This includes removing the inlet housing (65).
5. With the inlet housing removed, remove 5 screws (52) and cover (18).
6. Disconnect wires from heater cartridges (81).
7. Remove pipe plug (95) and springs (31) from bottom of core (68).
8. Use a 3/8 in. (10 mm) rod to push each cartridge out of the top of the core.
9. Wire new cartridges per FIG. 10 or FIG. 11, page 19.

RTD Sensor and Fitting Replacement

(Model 262853 and 24W612 Only)

1. Follow **Pressure Relief Procedure**, page 14.
2. Disconnect power.
3. Remove screws (52) then remove cover (18).
4. Disconnect M8 cable connection for sensor (88).
5. Loosen nut on compression fitting (72) and pull the sensor (88) straight up and out.
6. Remove compression fitting.

Reassembly

NOTICE
To avoid damage to the heater and inaccurate temperature readings, the sensor (88) position cannot be changed once a compression fitting (72) has been tightened. A new sensor (88) and a new compression fitting (72) must be used if the position is wrong.

NOTE: Sensor (88) and fitting (72) must be replaced together.

1. Install new compression fitting (72) into housing (67).

NOTICE
To avoid damage to the heater and inaccurate temperature readings, the RTD sensor must always be mounted on the outlet side of housing (67). If you plumb the outlet to the left side, swap position of sensor (88) and plug (82).

2. Position sensor through housing (67) so it sticks through the aluminum shoulder on core (68) 1/16 to 1/8 in. (1.6 to 3.2 mm) into fluid outlet, when looking into the outlet. See FIG. 13.

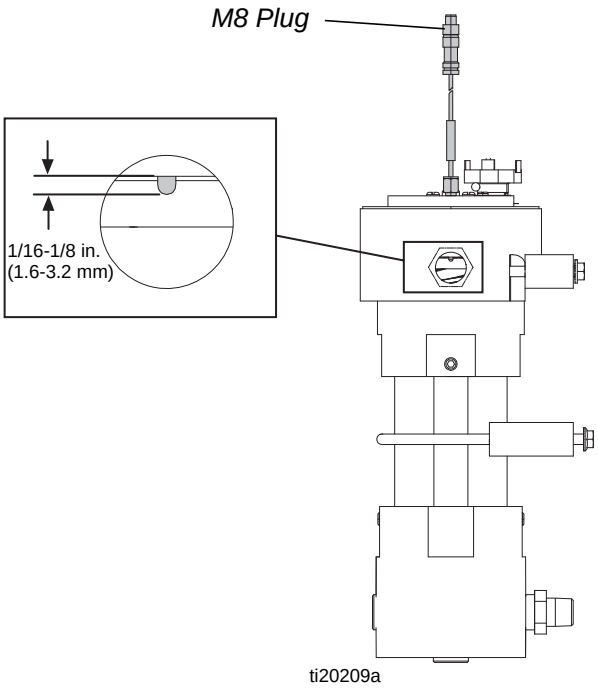

FIG. 13

3. Tighten compression nut on fitting (72) 3/4 turn after it holds sensor tight.
4. Connect M8 plug.
5. Install cover.

Parts

Non-Hazardous Location Heaters

24P016

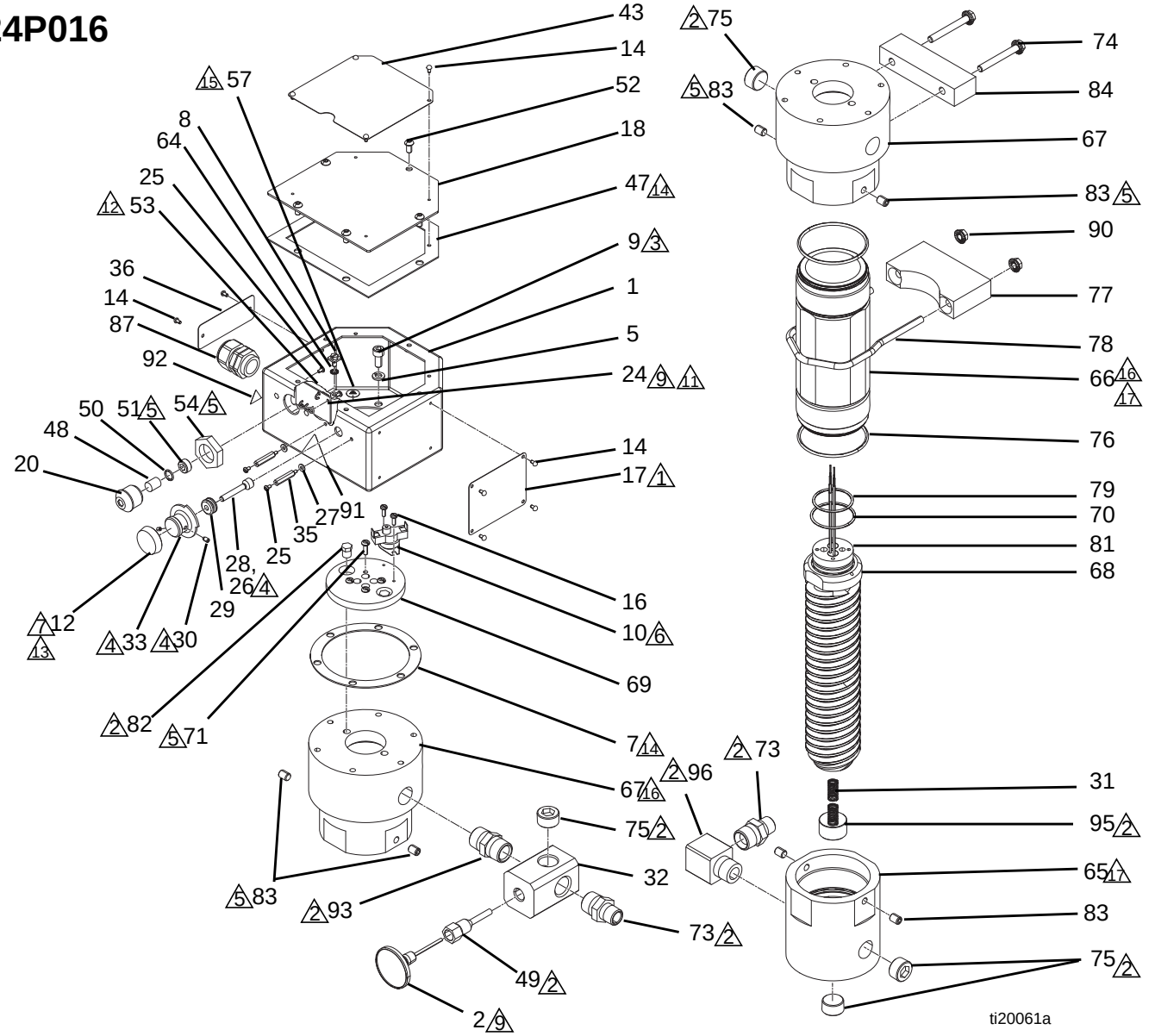

2 Apply sealant (39) and tape (44).

3 Torque to 7-11 ft-lb (10-15 N•m).

4 Loosen setscrew (26). Turn shaft (28) clockwise and re-tighten setscrew (26). Turn shaft counter-clockwise. Install knob (33) with “1” at 12 o’clock position. Tighten knob setscrew (30).

5 Apply sealant (34).

6 Apply thermal lubricant (38) to bottom of flange (10).

7 Press fit onto knob (33).

9 Apply thermal lubricant (38) completely covering probe before inserting.

11 Wrap capillary tube of thermostat (24) and attach strap (42). Do not kink or nick tube. Position wrapped capillary tube between thermostat (24) and wall of enclosure (1) maintaining at least 0.6 in. from heating element.

12 Connect appropriate wire (240V) and terminal end (part of item 53) to heater terminal.

13 Apply adhesive (56) if required.

14 Apply spray adhesive as necessary on gasket.

15 Locate on wall of housing near (8).

16 Assemble sleeve (66) to housing (67). After bottoming parts together loosen between 0 and 90 degrees to align set screws (83) to sleeve flats (66).

17 Assemble housing (65) to sleeve (66). After bottoming parts together loosen between 0 and 180 degrees to align set screws (83) to sleeve flats (66).

18 Cut wires from board.

24P016

Ref	Part	Description	Qty
1	---	ENCLOSURE, controls, heater	1
2	102124	THERMOMETER, dial	1
5	107542	WASHER, lock, spring	6
7	15A990	GASKET, heater	1
8	116343	SCREW, ground	1
9	117367	SCREW, socket head cap, M8 x 18	6
10	24P291	THERMOSTAT SWITCH	1
12	177969	KNOB, adjusting	1
14	100055	SCREW, drive, #6	10
16	105676	SCREW, machine, pan head	2
17	---	LABEL, brand	1
18	15A810	COVER, heater controls, top	1
20	15B828	HOUSING, light, heater	1
24	108676	THERMOSTAT	1
25	100032	SCREW, machine, pan head	4
26	105672	SCREW, set, socket cap head	1
27	114027	WASHER, flat	2
28	183068	SHAFT, switch	1
29	112738	GROMMET	1
30	101366	SCREW, set, socket cap head	1
31†	16A240	SPRING, compression	2
32	16R930	FITTING, tee, thermometer, 3/4	1
33	177968	KNOB, control	1
34	---	SEALANT, anaerobic	1
35	117526	SPACER, standoff, threaded	2
36▲	15B623	LABEL, electric shock warning	1
37	246346	WIRE, assy	1
38†	110009	LUBRICANT, thermal, 1 oz tube	1
39†	---	SEALANT, pipe, stainless steel	1
42	---	STRAP, tie wiring	1
43▲	15B625	LABEL, multiple warnings, English	1
44	---	TAPE, tfe, sealant	1
47	15A991	GASKET, heater	1
48	15B827	LENS, light, glass	1
49	15D757	HOUSING, thermometer	1
50	103338	PACKING, o-ring	1
51	117483	SCREW, jam, socket	1
52	111962	SCREW, cap, button head	5
53	246014	BOARD, circuit, heater indicator light assembly	1
54	106216	NUT, lock	1
56	---	SEALANT, anaerobic	1
57▲	172953	LABEL, grounding symbol, round	1
60▲◆	15B819	LABEL, multiple warnings, multi-language	1
64	111307	WASHER, lock, external	1
65	24P019	HOUSING, inlet, heater	1
66	24P021	SLEEVE, center, heater	1
67	24P020	HOUSING, outlet, heater	1
68†	---	CORE, spiral, heater	1
69	16P607	PLATE, mounting, heater	1
70†	164891	PACKING, o-ring	1
71†	103374	SCREW, machine, round head	4
73	16R883	FITTING, nipple, reducing, 3/4 x 1/2	2
74	---	SCREW, machine, serrated hex head; 5/16-18 x 2.5 in.	2
75	102726	PLUG, pipe headless, 3/4 in.	4
76†	126396	PACKING, o-ring, PTFE, 235	2
77	16P609	CLAMP, mounting, bottom, heater	1
78	16P610	CLAMP, u-bolt, heater	1
79†	102930	PACKING, o-ring	1
81	16P821	CARTRIDGE, heater, 2700W, 240V	2
82	556410	PLUG, steel 1/8 pipe hex head	2
83	101679	SCREW, set, socket cap	4
84	16P608	CLAMP, mounting, top, heater	1
87	121603	GRIP, cord, 0.51-0.71, 3/4	1
89◆	122032	NUT, wire	3
90	110996	NUT, hex, flange head	2
91▲	189285	LABEL, burn hazard, triangular	1
92▲	189930	LABEL, shock hazard, triangular	1
93	16R882	FITTING, nipple, 3/4	1
95†	105325	PLUG, pipe	1
96	166590	FITTING, elbow, street, high pressure	1
97	16T515	WIRE, assembly, ring x quick connect	1
98	16T502	WIRE, assembly	1

--- *Not for sale.*

▲ *Replacement Danger and Warning labels, tags and cards are available at no cost.*

◆ *Not shown.*

† *Parts included in Heater Core (68) Replacement Kit 24P022.*

262853

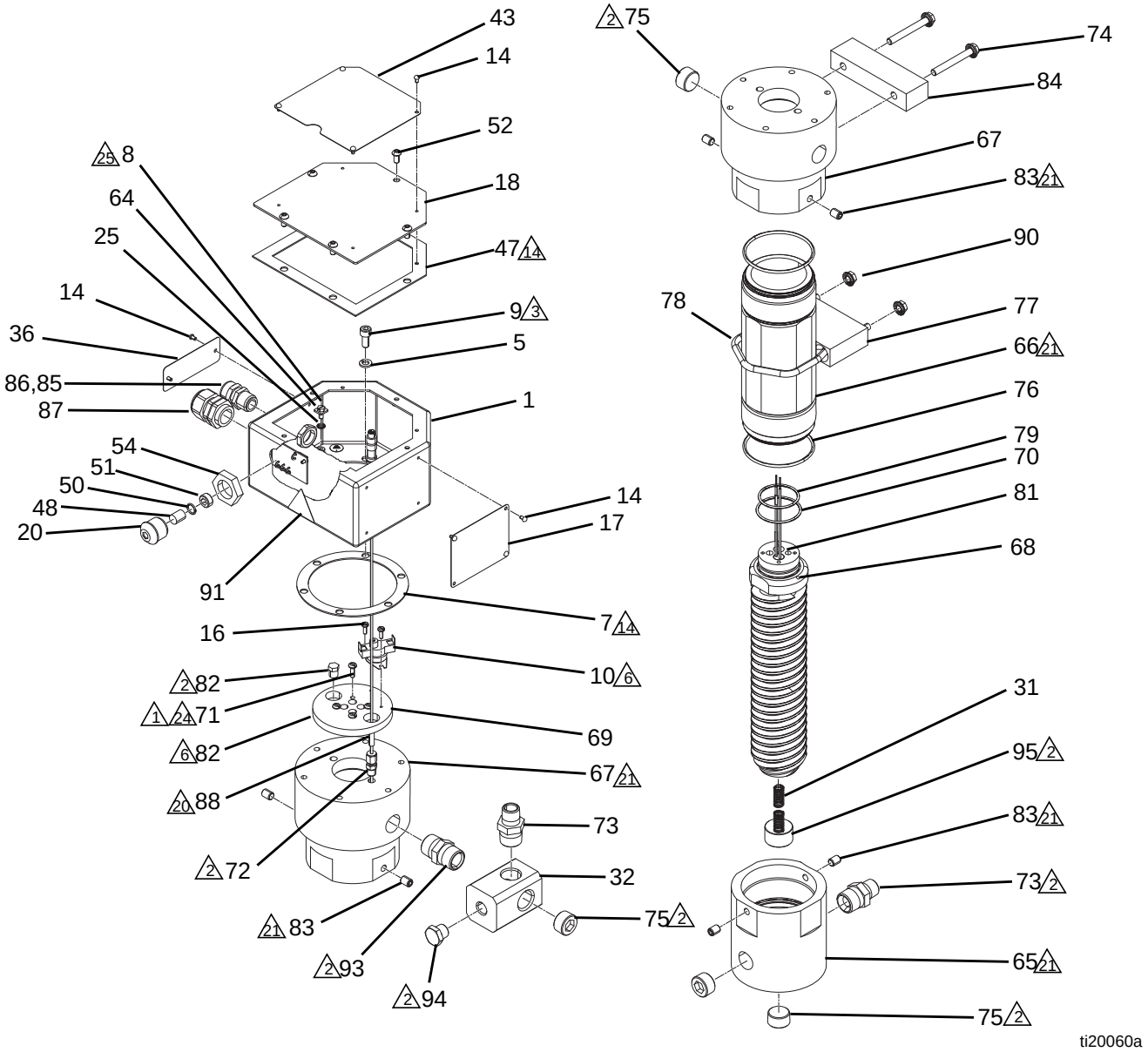

1 Apply medium strength, thread-locking fluid.

2 Apply sealant (39) and tape (44).

3 Torque to 7-11 ft-lb (10-15 N•m).

6 Apply thermal lubricant (38) to bottom of flange (10) and plate (82) and top of core (68).

12 Connect appropriate wire (240V) and terminal end (part of item 53) to heater terminal.

14 Apply spray adhesive as necessary on gasket.

18 Cut wires from board. Cut ring terminals from white wire and 240V black wire. Strip wire for connection to wire nuts (89).

19 Power cord is user supplied.

20 Secure RTD connector (88) with tie strap (42) to RTD stem (88).

21 Assemble sleeve (66) to housing (67). After bottoming parts together loosen between 0 and 90 degrees to align set screws (83) to sleeve flats (66).

24 Tighten screws adequately to compress o-ring (70). Plate (69) and core (68) must be tight against each other.

262853

Ref	Part	Description	Qty
1	---	ENCLOSURE, controls, heater	1
5	107542	WASHER, lock, spring	6
7	15A990	GASKET, heater	1
8	116343	SCREW, ground	1
9	117367	SCREW, shcs, m8x18	6
10	24P291	THERMOSTAT SWITCH	1
14	100055	SCREW, drive, #6	10
16	105676	SCREW, machine, pan head	2
17	---	LABEL, brand	1
18	15A810	COVER, heater controls, top	1
20	15B828	HOUSING, light, heater, viscon hp	1
25	100032	SCREW, machine, pan head	2
31†	16A240	SPRING, compression	2
32	16R930	FITTING, tee, thermometer, 3/4	1
36▲	15B623	LABEL, electric shock warning	1
37	16T502	WIRE, assembly	2
38†	110009	LUBRICANT, thermal, 1 oz tube	1
39†	---	SEALANT, pipe, stainless steel	1
42	---	STRAP, tie wiring	2
43▲	15B625	LABEL, multiple warnings, English	1
44	---	TAPE, tfe, sealant	1
47	15A991	GASKET, heater	1
48	15B827	LENS, light, glass	1
50	103338	PACKING, o-ring	1
51	117483	SCREW, jam, socket	1
52	111962	SCREW, cap, button head	5
53	246014	BOARD, circuit, heater indicator light assembly	1
54	106216	NUT, lock	1
57▲	172953	LABEL, grounding symbol, round	1
60▲◆	15B819	LABEL, multiple warnings, multi-language	1
64	111307	WASHER, lock, external	1
65	24P019	HOUSING, inlet, heater	1
66	24P021	SLEEVE, center, heater	1
67	24P020	HOUSING, outlet, heater	1
68†	---	CORE, spiral, heater	1
69	16P607	PLATE, mounting, heater	1
70†	164891	PACKING, o-ring, PTFE, #135	1
71†	103374	SCREW, machine, round head	4
72	126351	FITTING, compression, thermocouple	1
73	16R883	FITTING, nipple, reducing, 3/4 x 1/2	2
74	126669	SCREW, machine, serrated hex head; 5/16-18 x 2.5 in.	2
75	102726	PLUG, pipe headless, 3/4 in.	4
76†	126396	PACKING, o-ring, PTFE, 235	2
77	16P609	CLAMP, mounting, bottom, heater	1
78	16P610	CLAMP, u-bolt, heater	1
79†	102930	PACKING, o-ring	1
81	16P821	CARTRIDGE, heater, 2700W, 240V	2
82	16V591	PLUG, steel locator	1
83	101679	SCREW, set, socket cap	4
84	16P608	CLAMP, mounting, top, heater	1
85	260067	FITTING, strain relief, 1/2 npt	1
86	117625	NUT, locking	1
87	121603	GRIP, cord, 0.51-0.71, 3/4	1
88	126381	SENSOR, RTD, 1k ohm, 4 pin	1
89◆	122032	NUT, wire	3
90	110996	NUT, hex, flange head	2
91▲	189285	LABEL, burn hazard, triangular	1
92▲	189930	LABEL, shock hazard, triangular	1
93	16R882	FITTING, nipple, 3/4	1
94	198292	PLUG, pipe, 3/8 npt	1
95†	105325	PLUG, pipe	1

--- *Not for sale.*

▲ *Replacement Danger and Warning labels, tags and cards are available at no cost.*

◆ *Not shown.*

† *Parts included in Heater Core (68) Replacement Kit 24P022.*

Hazardous Location Heaters

24W248

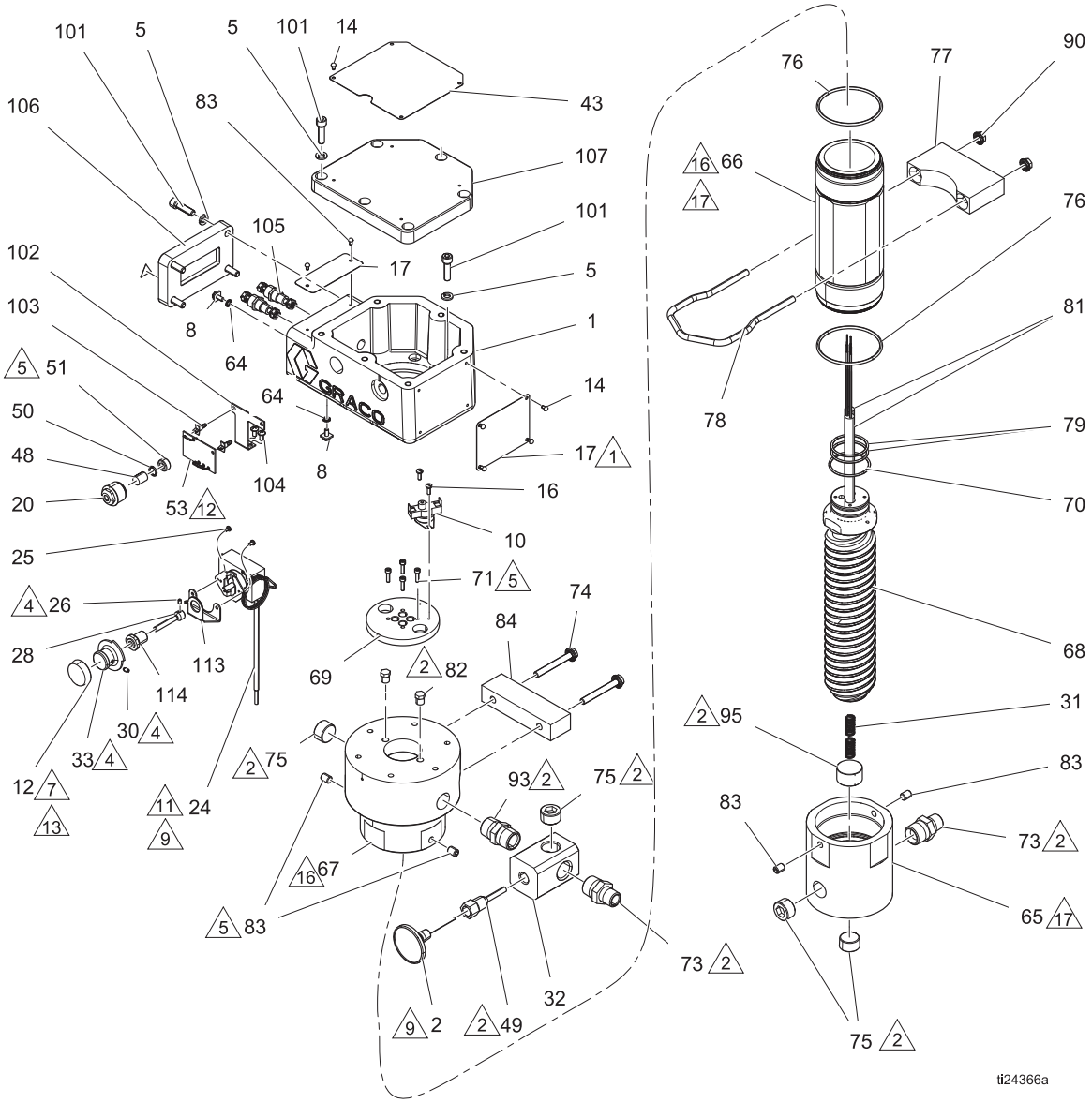

2 Apply sealant (39) and tape (44).

3 Torque to 7-11 ft-lb (10-15 N•m).

4 Loosen setscrew (26). Turn shaft (28) clockwise and re-tighten setscrew (26). Turn shaft counter-clockwise. Install knob (33) with “1” at 12 o’clock position. Tighten knob setscrew (30).

5 Apply sealant (34).

6 Apply thermal lubricant (38) to bottom of flange (10).

7 Press fit onto knob (33).

9 Apply thermal lubricant (38) completely covering probe before inserting.

11 Wrap capillary tube of thermostat (24) and attach strap (42). Do not kink or nick tube. Position wrapped capillary tube between thermostat (24) and wall of enclosure (1) maintaining at least 0.6 in. from heating element.

12 Connect appropriate wire (240V) and terminal end (part of item 53) to heater terminal.

13 Apply adhesive (56) if required.

14 Apply spray adhesive as necessary on gasket.

15 Locate on wall of housing near (8).

16 Assemble sleeve (66) to housing (67). After bottoming parts together loosen between 0 and 90 degrees to align set screws (83) to sleeve flats (66).

17 Assemble housing (65) to sleeve (66). After bottoming parts together loosen between 0 and 180 degrees to align set screws (83) to sleeve flats (66).

18 Cut wires from board.

24W248

Ref	Part	Description	Qty
1	---	HOUSING, control	1
2	102124	THERMOMETER, dial	1
5	107542	WASHER, lock, spring	16
8	116343	SCREW, ground	2
10	16T504	THERMOSTAT, viscon, hf, 260f	1
12	177969	KNOB, adjusting	1
14	100055	SCREW, drive, #6	10
16	105676	SCREW, mach, pnh	2
17	---	PLATE, identification, viscon hf	1
18	183073	COVER, housing	1
20	17D130	HOUSING, light, sightglass	1
24	108676	SWITCH, thermostat	1
25	100032	SCREW, mach, pnh	2
26	105672	SCREW, set, sch	1
28	183068	SHAFT, switch	1
30	101366	SCREW, set, sch	1
31†	16A240	SPRING, compression	2
32	16R930	FITTING, tee, thermometer, 3/4	1
33	177968	KNOB, control	1
36▲	15B623	LABEL, electric shock warning	1
37	246346	WIRE, assy	2
38†	110009	LUBRICANT, thermal, 1 oz tube	1
39†	---	SEALANT, pipe, stainless steel	1
42	102478	STRAP, tie wiring	1
43▲	15B625	LABEL, multiple warnings, English	1
48	15B827	LENS, light, glass	1
49	15D757	HOUSING, thermometer, viscon hp	1
50	103338	PACKING, o-ring	1
51	117483	SCREW, jam, socket	1
53	246014	BOARD, ckt, htr ind light assy	1
60▲	15B819	LABEL, warning, viscon hp	1
61▲	15B777	LABEL, warning, viscon hp	1
64	111307	WASHER, lock, external	2
65	16P603	HOUSING, inlet, heater	1
66	16P605	SLEEVE, center, heater	1
67	17C956	HOUSING, outlet, heater	1
68†	---	CORE, spiral, heater	1
69†	17C957	PLATE, mounting, heater	1
70†	164891	PACKING, o-ring	1
71†	16K078	SCREW, mach, rdh	4
73	16R883	FITTING, nipple, reducing, 3/4 x 1/2	2
74	---	SCREW, mach, serrated hex head; 5/15-18 x 2.5 in	2
75	102726	PLUG, pipe headles	4
76†	126396	PACKING, o-ring, ptfe, 235	2
77	16P609	CLAMP, mounting, bottom, heater	1
78	16P610	CLAMP, u-bolt, heater	1
79†	102930	PACKING, o-ring	2
81	16P821	CARTRIDGE, heater, 2700w, 240v	2
82	556410	PLUG, stl 1/8 pipe hex hd	2
83	101679	SCREW, set, sch	4
84	16P608	CLAMP, mounting, top, heater	1
89◆	122032	NUT, wire	2
90	110996	NUT, hex, flange head	2
93	16R882	FITTING, nipple, 3/4	1
95†	105325	PLUG, pipe	1
98	16T502	WIRE, assembly	2
101	109114	SCREW, cap, sch	16
102	15B243	BRACKET, led ckt board mounting	1
103	117514	SPACER, circuit board mounting	2
104	114669	SCREW, mach, phillips pan hd	2
105	108675	BUSHING, post	2
106	183066	COVER	1
108	17C042	WIRE, assembly	1
109◆	108664	TOOL, wrench allen	1
110◆	105747	TOOL, wrench, allen	1
111◆	101369	TOOL, allen, wrench	1
113	183067	BRACKET, switch	1
114	183071	BUSHING	1

--- *Not for sale.*

▲ *Replacement Danger and Warning labels, tags and cards are available at no cost.*

◆ *Not shown.*

† *Parts included in Heater Core (68) Replacement Kit 24Y660.*

24W612

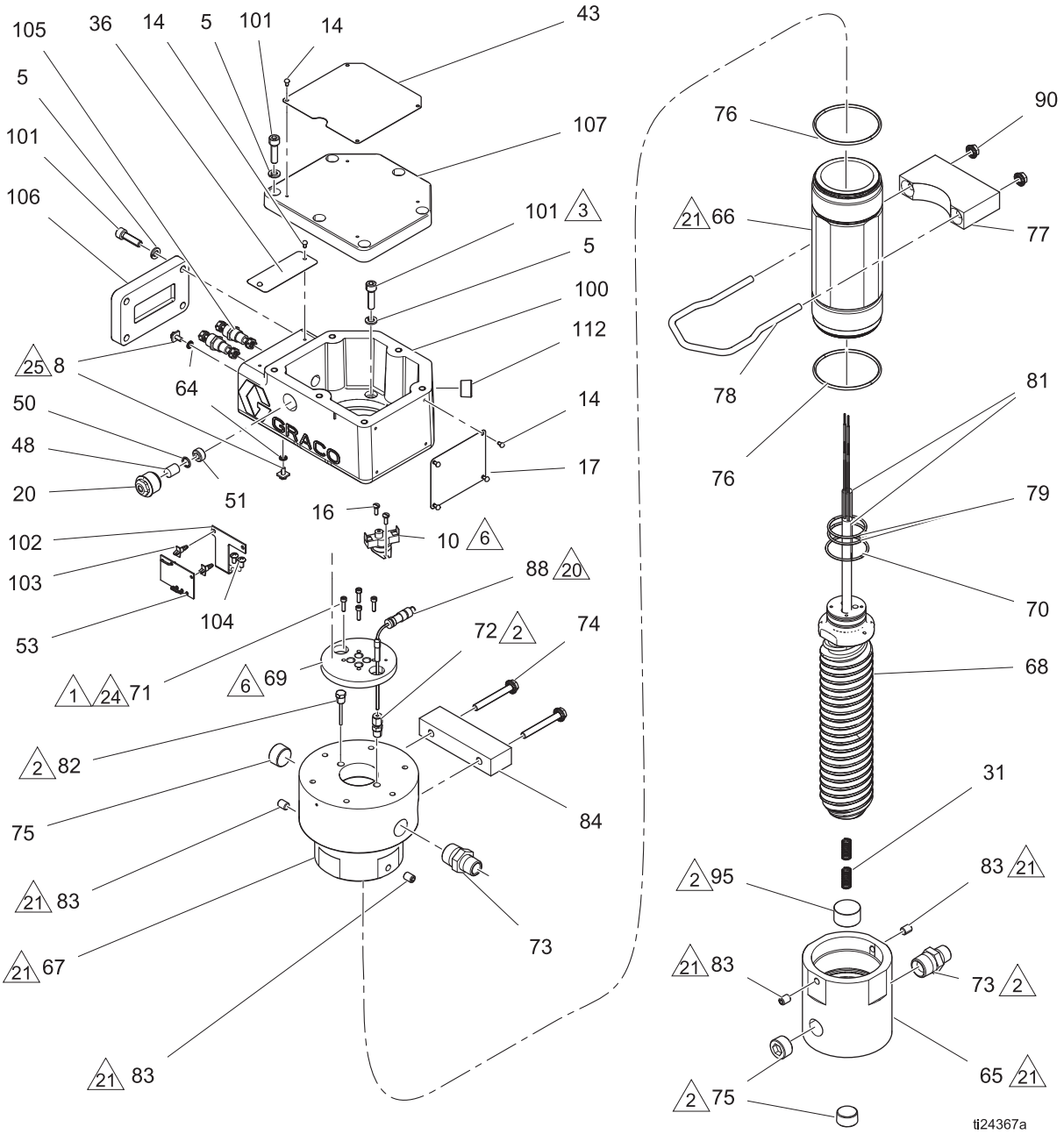

1 Apply medium strength, thread-locking fluid.

2 Apply sealant (39) and tape (44).

3 Torque to 7-11 ft-lb (10-15 N•m).

6 Apply thermal lubricant (38) to bottom of flange (10) and plate (82) and top of core (68).

12 Connect appropriate wire (240V) and terminal end (part of item 53) to heater terminal.

14 Apply spray adhesive as necessary on gasket.

18 Cut wires from board. Cut ring terminals from white wire and 240V black wire. Strip wire for connection to wire nuts (89).

19 Power cord is user supplied.

20 Secure RTD connector (88) with tie strap (42) to RTD stem (88).

21 Assemble sleeve (66) to housing (67). After bottoming parts together loosen between 0 and 90 degrees to align set screws (83) to sleeve flats (66).

24 Tighten screws adequately to compress o-ring (70). Plate (69) and core (68) must be tight against each other.

24W612

Ref.	Part	Description	Qty
1	---	HOUSING, control	1
5	107542	WASHER, lock,spring	16
8	116343	SCREW, ground	2
10	16T504	THERMOSTAT, viscon, hf, 260f	1
14	100055	SCREW, drive, #6	10
16	105676	SCREW, mach,p nh	2
17	---	PLATE, identification, viscon hf	1
18	183073	COVER, housing	1
20	17D130	HOUSING, light, sightglass	1
32	16R930	FITTING, tee, thermometer,3/4	1
31†	16A240	SPRING, compression	2
36	15B623	LABEL, plate, des, viscon hp	1
37	16T502	WIRE, assembly	2
38†	110009	LUBRICANT, thermal, 1 oz tube	1
39†	---	SEALANT, pipe, stainless steel	1
42	---	strap, tie wiring	1
43▲	15B625	LABEL, plate, warning	1
48	15B827	LENS, light, glass	1
50	103338	PACKING, o-ring	1
51	117483	SCREW, jam, socket	1
53	246014	BOARD, ckt, htr ind light assy	1
60▲	15B819	LABEL, warning, viscon hp	1
61▲	15B777	LABEL, warning, viscon hp	1
64	111307	WASHER, lock, external	2
65	16P603	HOUSING, inlet, heater	1
66	16P605	SLEEVE, center, heater	1
67	17C956	HOUSING, outlet,heater	1
68†	---	CORE, spiral, heater	1
69†	17C957	PLATE, mounting, heater	1
70†	164891	PACKING, o-ring	1
71†	16K078	SCREW, mach, rdh	4
72	126351	FITTING, compression,t hermo-couple	1
73	16R883	FITTING, nipple, r educing,3/4 x 1/2	2
74	126669	SCREW, mach, serrated hex head	2
75	102726	PLUG, pipe headles	4
76	126396	PACKING, o-ring, ptfe, 235	2
77	16P609	CLAMP, mounting, bottom, heater	1
78	16P610	CLAMP, u-bolt, heater	1
79†	102930	PACKING, o-ring	2
81	16P821	CARTRIDGE, heater, 2700w, 240v	2
82	16V591	PLUG, pin lock	1
83	101679	SCREW, set, sch	4
84	16P608	CLAMP, mounting, top, heater	1
88	126381	SENSOR, rtd, 1k ohm, 4 pin	1
89◆	122032	NUT, wire	2
90	110996	NUT, hex, flange head	2
93	16R882	FITTING, nipple, 3/4	1
94	198292	PLUG, pipe, 3/8 npt	1
95†	105325	PLUG, pipe	1
96	16U122	WIRE, 14awg, high temp	1
101	109114	SCREW, cap, sch	16
102	15B243	BRACKET, led ckt board mount-ing	1
103	117514	SPACER, circuit board mounting	2
104	114669	SCREW, mach, phillips pan hd	2
105	108675	BUSHING, post	2
106	183066	COVER	1
108	17C042	WIRE, assembly	1
109◆	108664	TOOL, wrench allen	1
110◆	105747	TOOL, wrench, allen	1
111◆	101369	TOOL, wrench, allen	1
112	100361	PLUG, pipe	1

--- *Not for sale.*

▲ *Replacement Danger and Warning labels, tags and cards are available at no cost.*

◆ *Not shown.*

† *Parts included in Heater Core (68) Replacement Kit 24Y660.*

Accessories

Mounting Bracket

192585

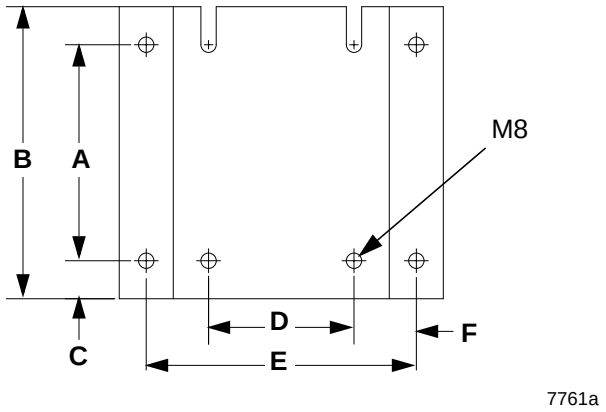

Dimensions – inches (mm)

A	B	C (4x)	D	E	F (2x)
5.0 (127)	6.76 (172)	0.88 (22.4)	3.37 (85.6)	6.25 (158.8)	1.44 (36.6)

Cart Bracket

For mounting heaters to 2.5 in. (63 mm) square tube frames. Order 2 each of the following.

183484: Clamp

183485: Mounting bar

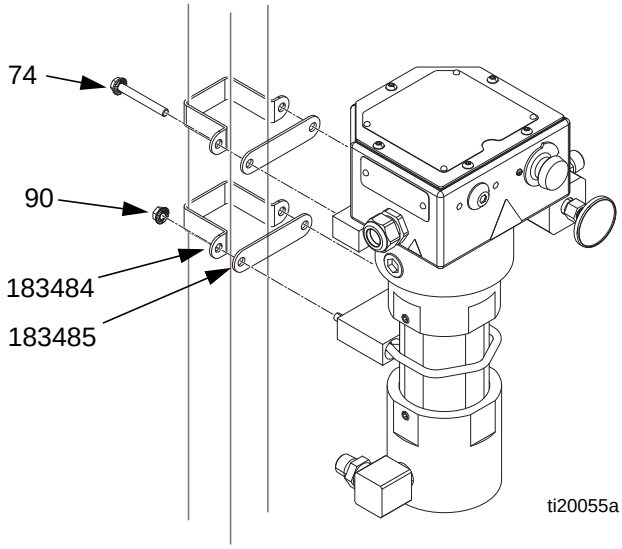

74 & 90 screw and nut included with heater

Thermal Lubricant

110009: 1 fluid ounce tube

Power Cord Set

110160*: 600 V, 12 Awg, Extra Hard Usage Type St, High Temperature (221°F, 105°C) rated

24W679: 600 V, 12 Awg, Extra Hard Usage Type St, High Temperature (221°F, 105°C) rated

**Hazardous location heaters are no longer rated for use in a hazardous area when used with these accessories.*

Technical Data

The heater can be used in the following environmental conditions: indoor use, 99% maximum relative humidity, pollution degree 2, installation category II, maximum ambient temperature 140° F (60° C).

Maximum Working Pressure	7250 psi (50 MPa, 500 bar)
Voltage / Wattage / Current*	See **Models** on page 3.
Fluid Passage Heat Transfer Area	210 in.^{2} (1355 cm^2)
Fluid Passage Dimensions (3 parallel paths)	*Height:* 0.41 in. *Width:* 0.32 in. *Length:* 3 x 48 in.
Fluid Passage Equivalent Diameter	0.72 in. (18.3 mm)
Thermometer Range	64 - 250°F (18 - 121°C)
Wetted Parts	Stainless Steel, Anodized Aluminum, Electroless Nickel-Plated Steel, PTFE
Temperature Operating Range	84 - 219°F (29 - 104°C)
Weight	51 lb (23.2 kg)
RTD (Model 262853 and 24W612 Only)	1000 ohm, class B, 3-wire Connector: M8, 4-pin male

* *Main supply fluctuation not to exceed 10%.*

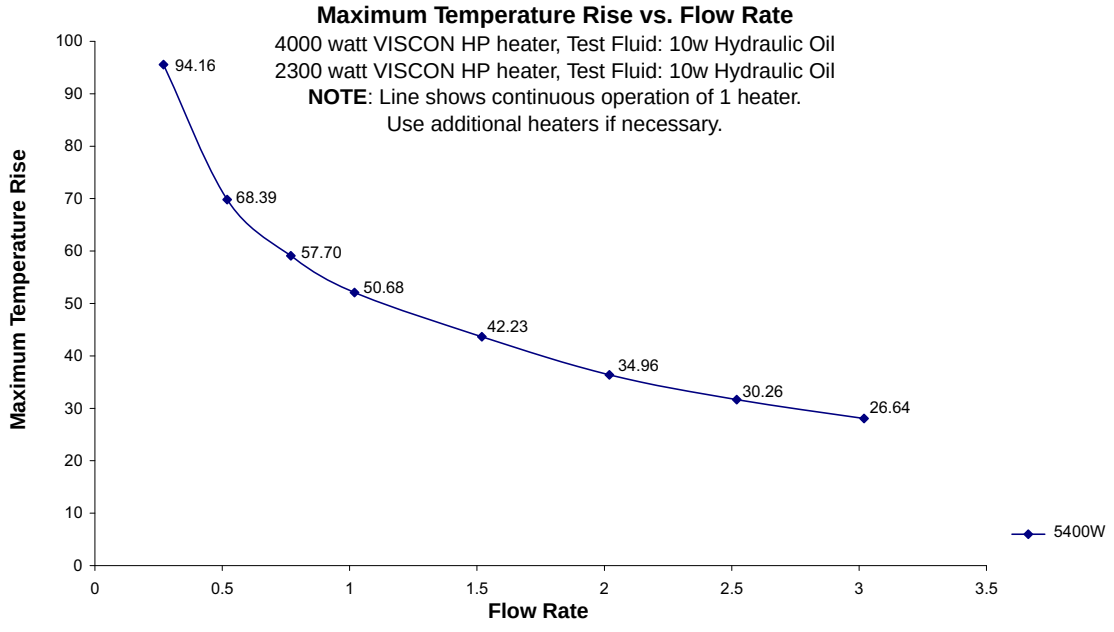

Performance Charts

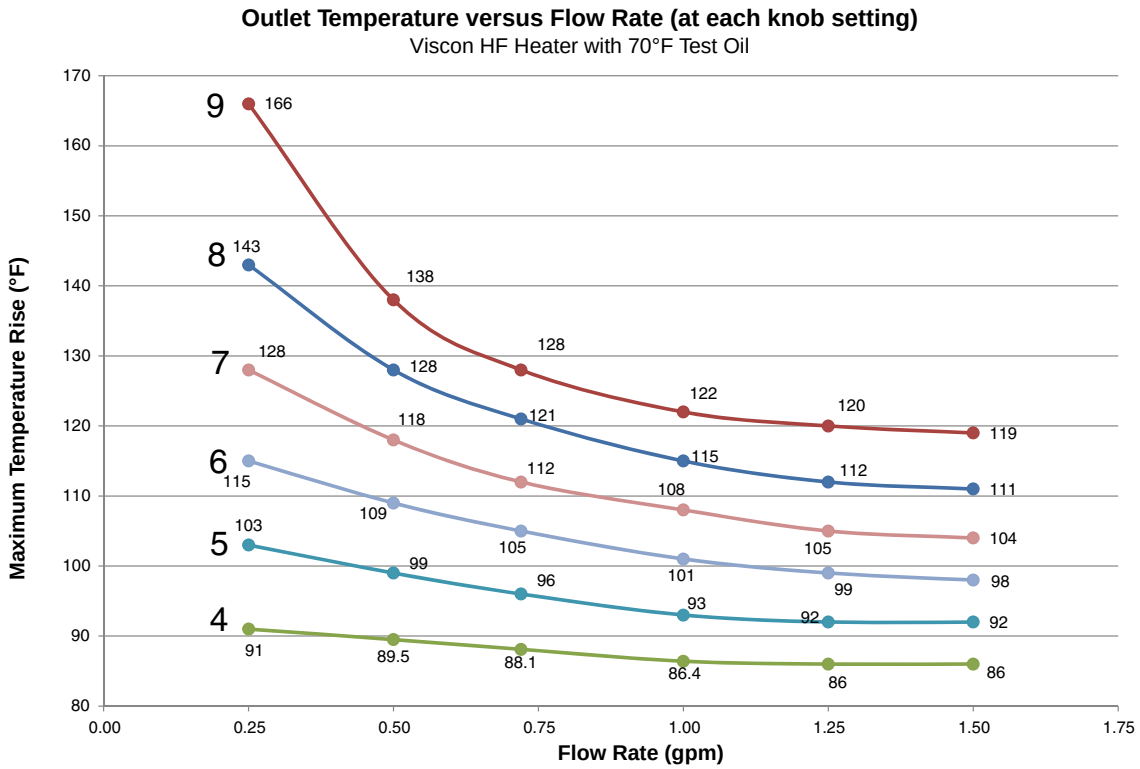

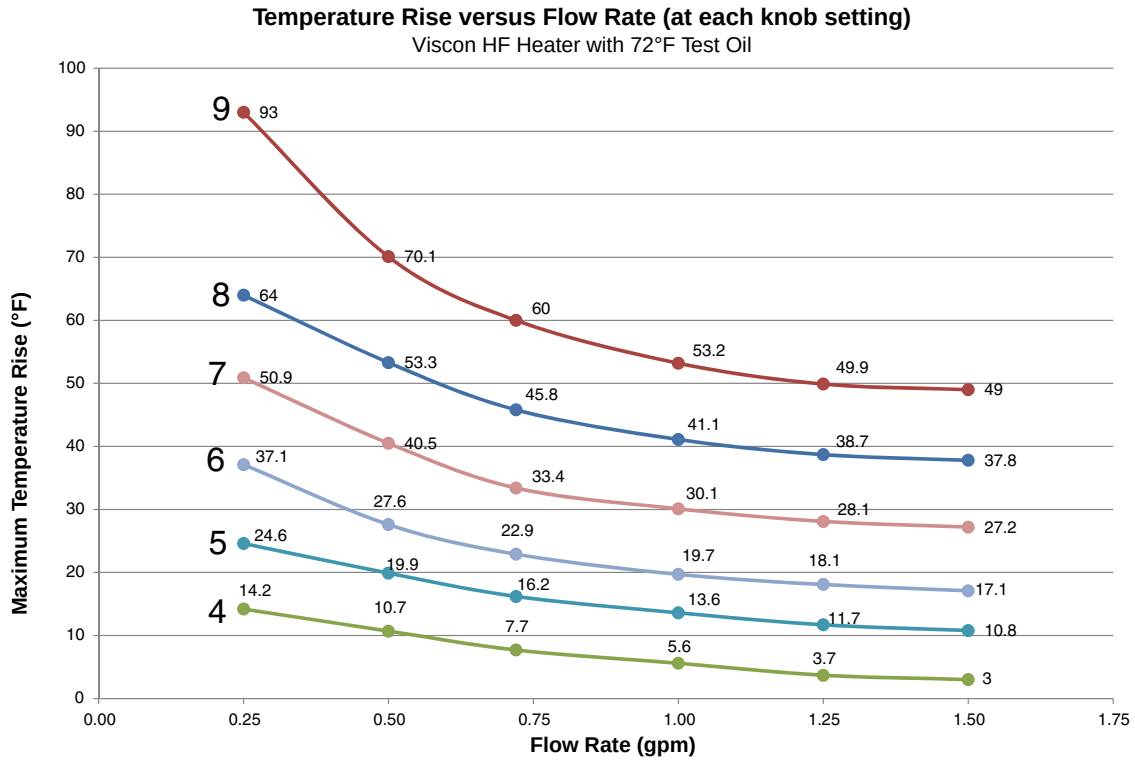

Dimensions

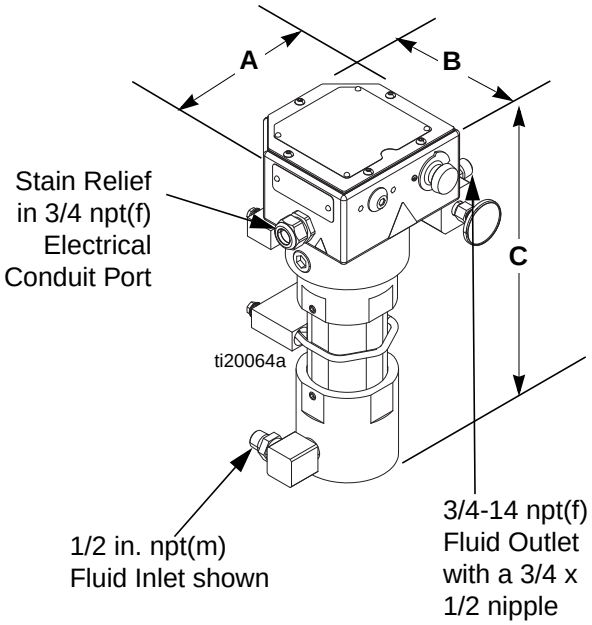

Model 24P016 shown

Measurements – inches (mm)

A	B	C
7.25 (184)	7.0 (178)	17.75 (451)

NOTE:

- 24P016 and 24W248 come with a 3/4 in. street elbow and a 3/4 x 1/2 inlet nipple.
- 262853 comes with a 3/4 x 1/2 inlet nipple pointing to the back.
- Lower inlet housing can be turned to face the front, back, left, or right.

Graco Standard Warranty

Graco warrants all equipment referenced in this document which is manufactured by Graco and bearing its name to be free from defects in material and workmanship on the date of sale to the original purchaser for use. With the exception of any special, extended, or limited warranty published by Graco, Graco will, for a period of twelve months from the date of sale, repair or replace any part of the equipment determined by Graco to be defective. This warranty applies only when the equipment is installed, operated and maintained in accordance with Graco's written recommendations.

This warranty does not cover, and Graco shall not be liable for general wear and tear, or any malfunction, damage or wear caused by faulty installation, misapplication, abrasion, corrosion, inadequate or improper maintenance, negligence, accident, tampering, or substitution of non-Graco component parts. Nor shall Graco be liable for malfunction, damage or wear caused by the incompatibility of Graco equipment with structures, accessories, equipment or materials not supplied by Graco, or the improper design, manufacture, installation, operation or maintenance of structures, accessories, equipment or materials not supplied by Graco.

This warranty is conditioned upon the prepaid return of the equipment claimed to be defective to an authorized Graco distributor for verification of the claimed defect. If the claimed defect is verified, Graco will repair or replace free of charge any defective parts. The equipment will be returned to the original purchaser transportation prepaid. If inspection of the equipment does not disclose any defect in material or workmanship, repairs will be made at a reasonable charge, which charges may include the costs of parts, labor, and transportation.

THIS WARRANTY IS EXCLUSIVE, AND IS IN LIEU OF ANY OTHER WARRANTIES, EXPRESS OR IMPLIED, INCLUDING BUT NOT LIMITED TO WARRANTY OF MERCHANTABILITY OR WARRANTY OF FITNESS FOR A PARTICULAR PURPOSE.

Graco's sole obligation and buyer's sole remedy for any breach of warranty shall be as set forth above. The buyer agrees that no other remedy (including, but not limited to, incidental or consequential damages for lost profits, lost sales, injury to person or property, or any other incidental or consequential loss) shall be available. Any action for breach of warranty must be brought within two (2) years of the date of sale.

GRACO MAKES NO WARRANTY, AND DISCLAIMS ALL IMPLIED WARRANTIES OF MERCHANTABILITY AND FITNESS FOR A PARTICULAR PURPOSE, IN CONNECTION WITH ACCESSORIES, EQUIPMENT, MATERIALS OR COMPONENTS SOLD BUT NOT MANUFACTURED BY GRACO. These items sold, but not manufactured by Graco (such as electric motors, switches, hose, etc.), are subject to the warranty, if any, of their manufacturer. Graco will provide purchaser with reasonable assistance in making any claim for breach of these warranties.

In no event will Graco be liable for indirect, incidental, special or consequential damages resulting from Graco supplying equipment hereunder, or the furnishing, performance, or use of any products or other goods sold hereto, whether due to a breach of contract, breach of warranty, the negligence of Graco, or otherwise.

FOR GRACO CANADA CUSTOMERS
The Parties acknowledge that they have required that the present document, as well as all documents, notices and legal proceedings entered into, given or instituted pursuant hereto or relating directly or indirectly hereto, be drawn up in English. Les parties reconnaissent avoir convenu que la rédaction du présente document sera en Anglais, ainsi que tous documents, avis et procédures judiciaires exécutés, donnés ou intentés, à la suite de ou en rapport, directement ou indirectement, avec les procédures concernées.

Graco Information

For the latest information about Graco products, visit www.graco.com.

For patent information, see www.graco.com/patents.

TO PLACE AN ORDER, contact your Graco distributor or call to identify the nearest distributor.
Phone: 612-623-6921 or Toll Free: 1-800-328-0211 Fax: 612-378-3505

All written and visual data contained in this document reflects the latest product information available at the time of publication. Graco reserves the right to make changes at any time without notice.

Original instructions. This manual contains English. MM 3A2954

Graco Headquarters: Minneapolis
International Offices: Belgium, China, Japan, Korea

GRACO INC. AND SUBSIDIARIES • P.O. BOX 1441 • MINNEAPOLIS MN 55440-1441 • USA

www.graco.com
Revision G, September 2015