# Instructions–Parts List

**Spring-Operated and Air-Operated, High Pressure**

# Mastic Fluid Regulators

307517Z
EN

*5000 psi (34.4 MPa, 344 bar) Maximum Inbound Fluid Pressure*

These regulators control downstream pressure for mastic or semi-solid material. Install a regulator ahead of each spray gun or extruder gun in a multiple outlet system. The regulator provides precise pressure control to each spray gun from a common header system. It also dampens flow surges when line valves are opened and during pump stroke changeover.

**Important Safety Instructions**
Read all warnings and instructions in this manual.
Save these instructions.
See page 2 for List of Models and Table of Contents.

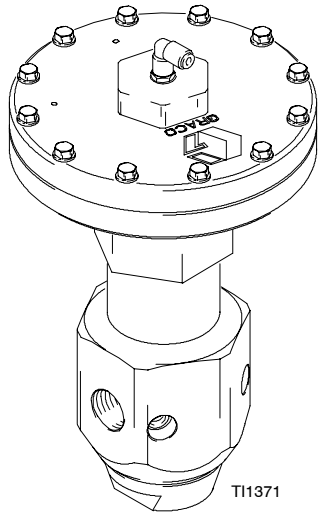


**Model 244740**

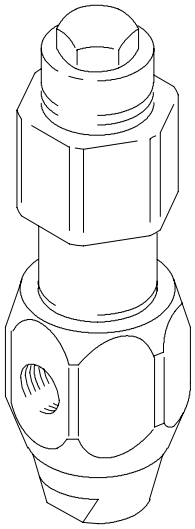

**Model 903958**

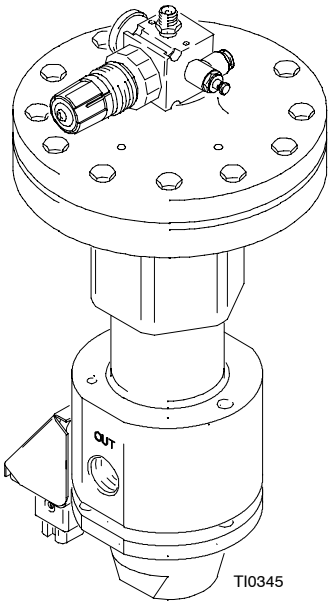


**Model 243700**

PROVEN QUALITY. LEADING TECHNOLOGY.

# Table of Contents


Warnings . . . . . 3
Installation . . . . . 6
Operation . . . . . 7
Maintenance . . . . . 8
Parts . . . . . 10
Dimensions . . . . . 28
Wiring Diagram . . . . . 29
Technical Data . . . . . 30
Accessories . . . . . 31
Graco Standard Warranty . . . . . 32
Graco Information . . . . . 32


# List of Ambient Models

| Part No. | Series | Regulator Operation | Regulated Fluid Pressure | Maximum Inbound Air Pressure | Parts Page |
|---|---|---|---|---|---|
| 903958 | Series B | Spring-operated, high range (low range spring is available, see page 31) | 1000–4500 psi (7.0–31.0 MPa, 70–310 bar) | | 12 |
| 961635 | Series C | Air-operated | 250–4500 psi (2.8–31.0 MPa, 17–310 bar) | 100 psi (0.7 MPa, 7 bar) | 12 |
| 244740 | Series C | Air–operated | 250–4500 psi (2.8–31.0 MPa, 17–310 bar) | 100 psi (0.7 MPa, 7 bar) | 14 |
| C58318 | Series A | Air-operated | 250–4500 psi (2.8–31.0 MPa, 17–310 bar) | 100 psi (0.7 MPa, 7 bar) | 16 |
| 246642 | Series C | Air–operated | 100–4500 psi (0.7–31.0 MPa, 7–310 bar) | 100 psi (0.7 MPa, 7 bar) | 22 |
| 246687 | Series A | Air–operated | 100–4500 psi (0.7–31.0 MPa, 7–310 bar) | 100 psi (0.7 MPa, 7 bar) | 24 |
| 262549 | Series A | Air–operated | 100–2600 psi (0.7–18.0 MPa, 7–180 bar) | 60 psi (0.4 MPa, 4 bar) | 24 |

# List of Temperature Conditioned/Heated Models

| Part No. | Heat Method | Regulator Operation | Regulated Fluid Pressure | Maximum Inbound Air Pressure | Parts Page |
|---|---|---|---|---|---|
| 243700 | 240 VAC | Air-operated | 250–3500 psi (1.7–24.1 MPa, 17–241 bar) | 65 psi (0.45 MPa, 4.5 bar) | 10 |
| 918447 | 120 VAC | Air–operated (Mounting Bracket Kit Available) | 250–3500 psi (1.7–24.1 MPa, 17–241 bar) | 65 psi (0.45 MPa, 4.5 bar) | 20 |
| 246643 | 240 VAC | Air-operated | 100–3500 psi (0.7–24.1 MPa, 7–241 bar) | 65 psi (0.45 MPa, 4.5 bar) | 26 |
| 246688 | 240 VAC | Air-operated | 100–3500 psi (0.7–24.1 MPa, 7–241 bar) | 65 psi (0.45 MPa, 4.5 bar) | 28 |

# Symbols

### Warning Symbol

**⚠ WARNING**

This symbol alerts you to the possibility of serious injury or death if you do not follow the instructions.

### Caution Symbol

**⚠ CAUTION**

This symbol alerts you to the possibility of damage to or destruction of equipment if you do not follow the corresponding instructions.

## ⚠ WARNING

**SKIN INJECTION HAZARD**

Spray from the gun, hose leaks, or ruptured components can inject fluid into your body and cause an extremely serious injury, including the need for amputation. Splashing fluid in the eyes or on the skin can also cause a serious injury.

- Fluid injected into the skin might look like just a cut, but it is a serious injury. **Get immediate surgical treatment.**
- Do not point the spray gun/dispensing valve at anyone or at any part of the body.
- Do not put hand or fingers over the spray tip/nozzle.
- Do not stop or deflect fluid leaks with your hand, body, glove, or rag.
- Do not “blow back” fluid; this is not an air spray system.
- Always have the tip guard and the trigger guard on the spray gun/dispensing valve when spraying/dispensing.
- Be sure the gun trigger safety operates before spraying.
- Lock the gun/valve trigger safety when you stop spraying.
- Follow the **Pressure Relief Procedure** in your separate equipment manuals whenever you: are instructed to relieve pressure; stop spraying; clean, check, or service the equipment; and install or clean the spray tip.
- Tighten all the fluid connections before operating the equipment.
- Check the hoses, tubes, and couplings daily. Replace worn, damaged, or loose parts immediately. Permanently coupled hoses cannot be repaired; replace the entire hose.

*Warnings are continued on the next page.*

# ⚠ WARNING

## FIRE AND EXPLOSION HAZARD

Improper grounding, poor air ventilation, open flames, or sparks can cause a hazardous condition and result in fire or explosion and serious injury.

- Ground all equipment in the work area. See **Grounding** in your separate system manual.
- Provide fresh air ventilation to avoid the buildup of flammable fumes from solvent or the fluid being sprayed.
- Extinguish all the open flames or pilot lights in the spray/dispensing area.
- Electrically disconnect all the equipment in the spray/dispensing area.
- Keep the spray/dispensing area free of debris, including solvent, rags, and gasoline.
- Do not turn on or off any light switch in the spray/dispensing area while operating or if fumes are present.
- Do not smoke in the spray/dispensing area.
- Do not operate a gasoline engine in the spray/dispensing area.
- If there is any static sparking while using the equipment, **stop spraying/dispensing immediately**. Identify and correct the problem.
- Keep a fire extinguisher in the work area.

## TOXIC FLUID HAZARD

Hazardous fluids or toxic fumes can cause a serious injury or death if splashed in the eyes or on the skin, swallowed, or inhaled.

- Know the specific hazards of the fluid you are using. Read the fluid manufacturer's warnings.
- Store hazardous fluid in an approved container. Dispose of the hazardous fluid according to all local, state, and national guidelines.
- Wear appropriate protective clothing, gloves, eyewear, and respirator.

*Warnings are continued on the next page.*

# ⚠ WARNING

## EQUIPMENT MISUSE HAZARD

Equipment misuse can cause the equipment to rupture, malfunction, or start unexpectedly and result in a serious injury.

- This equipment is for professional use only.
- Read all the instruction manuals, tags, and labels before operating the equipment.
- Use the equipment only for its intended purpose. If you are uncertain about usage, call your Graco distributor.
- Do not alter or modify this equipment. Use only genuine Graco parts and accessories.
- Check the equipment daily. Repair or replace worn or damaged parts immediately.
- Do not exceed the maximum working pressure of the lowest rated system component. This equipment has a **5000 psi (34.4 MPa, 344 bar) maximum inbound fluid pressure**.
- Use fluids that are compatible with the equipment wetted parts. See the **Technical Data** section of all the equipment manuals. Read the fluid manufacturer's warnings.
- Route the hoses away from traffic areas, sharp edges, moving parts, and hot surfaces. Do not expose Graco hoses to temperatures above 180°F (82°C) or below −40°F (−40°C).
- Do not kink or over bend the hoses or use the hoses to pull equipment.
- Wear hearing protection when operating this equipment.
- Comply with all applicable local, state, and national fire, electrical, and other safety regulations.
- If your spray or extruder gun has a lower pressure rating than the pump, be sure you adjust its fluid regulator low enough to avoid exceeding the gun's maximum working pressure.

## MOVING PARTS HAZARD

Moving parts, such as the air motor piston, can pinch or amputate fingers.

- Do not operate the equipment with the air motor plates removed.
- Keep clear of any moving parts when starting or operating the equipment.

## HOT SURFACE AND FLUID HAZARD

Heated fluid can cause severe burns and can cause equipment surfaces to become very hot.

- Wear protective gloves and clothing when operating this equipment in a heated system.
- Do not touch the metal heat sink when the surface is hot.
- Allow the equipment to cool thoroughly before servicing.

Some heated systems are designed to dispense Polyurethane (PUR) heated materials. PUR systems are supplied with ventilation hoods, and require proper ventilation and specially designed system components.

# Installation

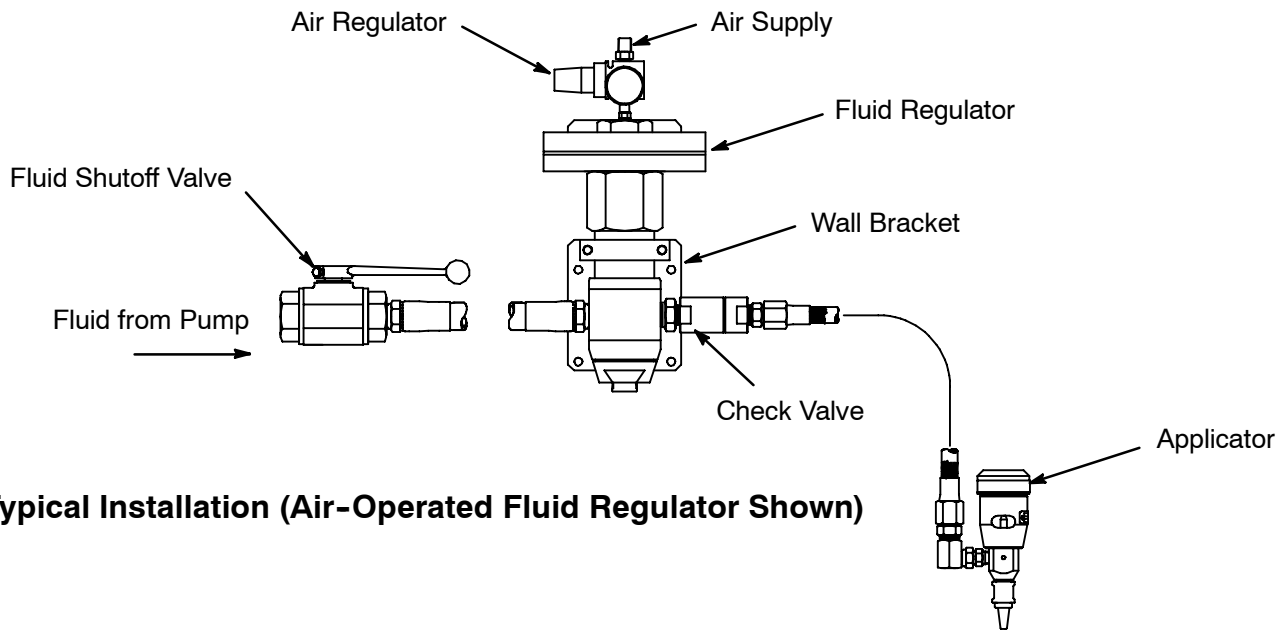


**Typical Installation (Air-Operated Fluid Regulator Shown)**

## General Information

**NOTES:**

- Reference numbers and letters in parentheses in the text refer to the callouts in the figures and the parts drawing.

- The **Typical Installation** shows a typical dead-end hookup. Regulators should be mounted close to the dispense point. The whip hose and nozzle must provide enough back pressure to stay within the adjustable range of the regulator. The majority of this restriction should be provided by the nozzle, to prevent static head pressure from increasing when the valve closes.

The regulators have one 3/4 npt(f) inlet port and two 3/4 npt(f) outlet ports for straight through or right angle flow. Install one regulator upstream from each gun on the line. A fluid pressure gauge can be installed in the second outlet port for precise monitoring of outlet pressure. Plug the port when not in use. See the **Typical Installation**, above, and the **Dimensions** section on page 28.

**⚠ WARNING**

When the second outlet port is not used, it must be plugged with a steel plug, supplied, to prevent high pressure fluid from being emitted from the port. High pressure fluid can cause serious injury.

*For an air-operated regulator,* connect a grounded air supply hose to the 1/4 npt(m) adapter at the inlet of the air regulator.

## Conversion Kit Installation

1. To relieve fluid pressure, shut off the power to the pump, trigger the gun to relieve pressure, and open any system bleed or drain valves. Remove the regulator from the line.

2. *If installing a new spring,* unscrew and remove the adjusting screw (6) and spring (9). Install the new spring and reinstall the screw.

3. *If converting to an air-operated regulator,* unscrew and remove the adjusting screw (6), spring (9), and spring guide (11) from the valve cylinder (7). Apply lubricant to the threads of the conversion kit diaphragm housing (101). Screw the housing into the valve cylinder, torque to 20 in-lb (2.25 N•m). See the Parts Drawing on page 12.

# Operation

## Adjusting the Regulator Outlet Pressure

**⚠ WARNING**

To reduce the risk of serious injury, never remove the adjusting screw or diaphragm housing when the valve is under pressure.

**For a spring-operated regulator,** turn the adjusting screw (6) counterclockwise to decrease and clockwise to increase pressure to the spray gun or extruder gun.

**For an air-operated regulator,** adjust the air regulator on top of the diaphragm (or other upstream air regulation device), to adjust the downstream fluid pressure up or down. See the chart at right for air vs. fluid pressure.

Adjust the pump air pressure and the mastic regulator pressure for the best dispensing combination. For the optimum performance, the inbound fluid pressure should be at least 600 psi (4.1 MPa, 41 bar) above the regulated fluid pressure.

**NOTE:** When using a fluid pressure gauge in the regulator outlet, partially relieve pressure by triggering the gun while reducing the regulator pressure. This helps ensure a correct gauge reading. For high accuracy applications, add a C06234 bleed fitting. This adjustable flow control replaces an outlet plug in the regulator. This allows the air regulator to hold a more accurate set point. Model C58318 comes with this bleed valve.

**NOTE:** Model 244740 is equipped with inlet and outlet pressure sensor ports. Pressure Sensor Kit 198082 can be used to monitor inlet and/or outlet pressures.

This chart shows the approximate air pressure needed to regulate the air-operated regulator to a given fluid outlet pressure.

| Air Pressure | | | Regulated Fluid Outlet Pressure | | |
|---|---|---|---|---|---|
| psi | bar | kPa | psi | bar | MPa |
| 10 | 0.7 | 70 | 500 | 35 | 3.5 |
| 15 | 1.0 | 100 | 800 | 55 | 5.5 |
| 20 | 1.4 | 140 | 1100 | 76 | 7.6 |
| 25 | 1.7 | 170 | 1300 | 90 | 9.0 |
| 30 | 2.1 | 210 | 1600 | 110 | 11.0 |
| 40 | 2.8 | 280 | 2100 | 145 | 14.5 |
| 50 | 3.5 | 350 | 2700 | 186 | 18.6 |
| 60 | 4.2 | 420 | 3200 | 221 | 22.1 |
| 70 | 4.9 | 490 | 3800 | 262 | 26.2 |
| 80 | 5.6 | 560 | 4300 | 296 | 29.6 |

# Maintenance

**⚠ WARNING**

To reduce the risk of serious injury, including fluid injection, or splashing in the eyes or on the skin, always relieve the air and fluid pressure in the system before adjusting, repairing, or removing the regulator from the system.

## Flushing

- Flush before changing colors, before fluid can dry in the equipment, at the end of the day, before storing, and before repairing equipment.
- Flush at the lowest pressure possible. Check connectors for leaks and tighten as necessary.
- Flush with a fluid that is compatible with the fluid being dispensed and the equipment wetted parts.

1. Record the pressure adjustment setting of the fluid regulator before flushing.
2. Shut off the pump and relieve fluid pressure in the system by triggering the gun and opening the back pressure regulator or other bypass valve.
3. Never exceed the maximum working pressure of the lowest rated system component. Remove the gauge if the flushing pressure will exceed the gauge range.
4. Open the fluid regulator fully.
   a. *Spring Operated Regulators Only.* Open the fluid regulator by turning the adjusting screw (6) fully *clockwise*.
   b. *Air Operated Regulator Only.* Increase the air regulator setting to fully open the fluid regulator. You will have to reset the fluid regulator's pressure setting after flushing.
5. Supply solvent to the system. Set pump to the lowest possible pressure, and start pump.
6. Flush until thoroughly clean.
7. Adjust the fluid regulator to the desired setting.
   a. *Spring Operated Regulators Only:* Turn the adjustment screw (6) *counterclockwise* to return to the desired pressure setting.
   b. *Air Operated Regulator Only.* Adjust the air regulator to return to the desired fluid pressure setting.

## Repair

Flush the regulator if possible, relieve fluid pressure, and remove the regulator from the system.

Disassemble the regulator. See the Parts Drawing on page 10. You do not have to disassemble the diaphragm housing of the air-operated regulator unless a problem is suspected.

# Notes

# Parts

**Model 243700 240 Volt Heated Regulator**

1 Torque to 35-40 ft-lb (47-54 N•m)

2 Use Loctite® 680 on threads

3 Use Loctite® 680 on threads.
Torque to 15-25 ft-lb (20-34 N•m)

4 Lips must face retaining ring (11)

5 First torque to 30-33 in-lb (3.4-3.7 N•m) in alternating pattern, then torque to 68-72 in-lb (7.7-8.7 N•m) in alternating pattern.

6 Torque to 12 +/- 2 ft-lb (16 +/- 2.7 N•m)

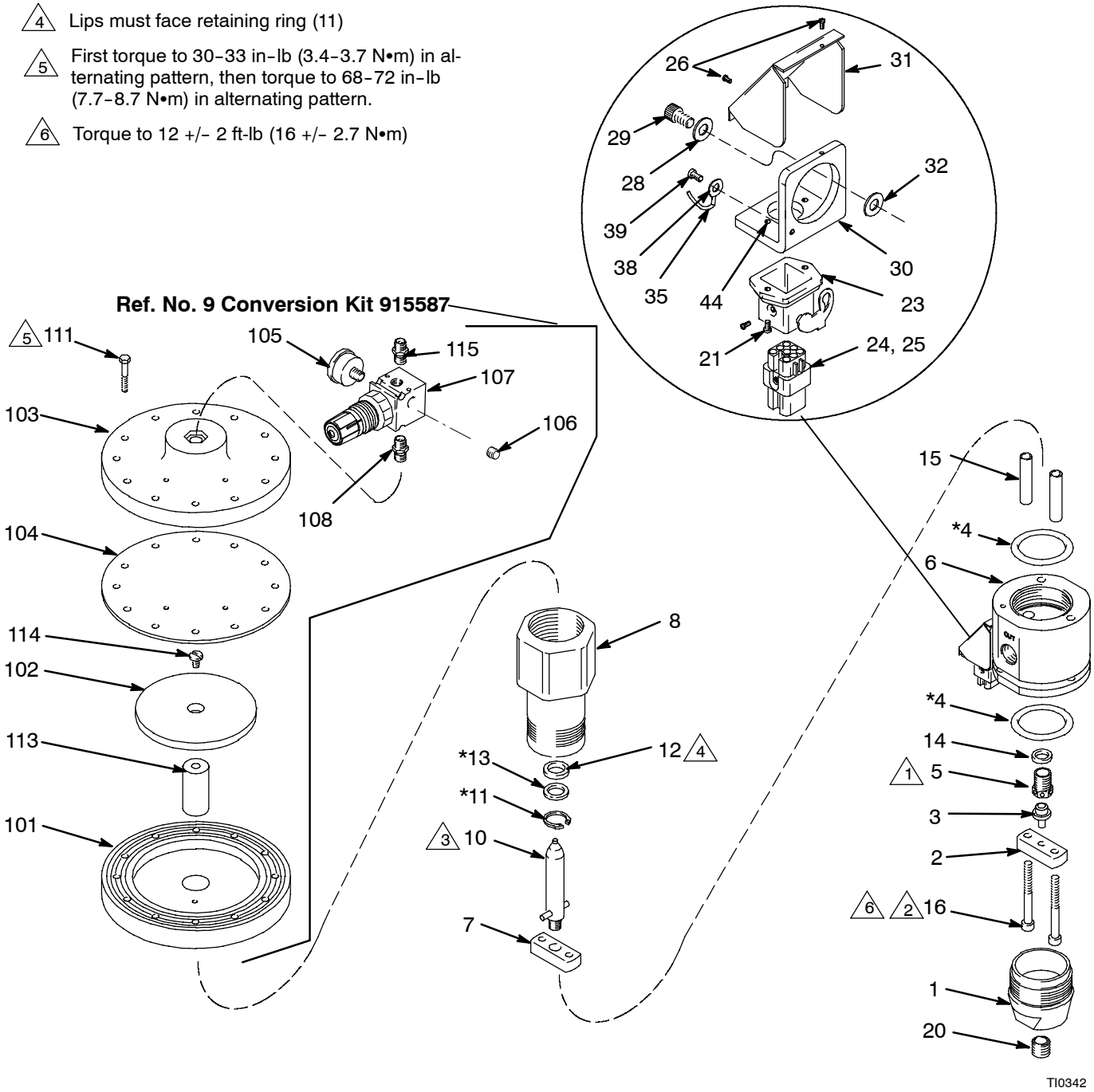

# Parts

**Model 243700 230 Volt Heated Regulator**

| Ref No. | Part No. | Description | Qty. |
|---|---|---|---|
| 1 | 607499 | CAP, end | 1 |
| 2 | 607498 | BAR, support bottom | 1 |
| 3 | 904029 | BALL, seat | 1 |
| 4* | 115938 | PACKING, o-ring; fluoroelastomer | 2 |
| 5 | 904030 | SEAT, regulator | 1 |
| 6 | 617434 | HOUSING, regulator | 1 |
| 7 | 607497 | SUPPORT, piston | 1 |
| 8 | 607500 | CYLINDER, valve | 1 |
| 9 | 915587 | HOUSING, diaphragm (See separate parts list) | 1 |
| 10 | 220899 | PISTON, regulator | 1 |
| 11* | 102386 | RING, retaining | 1 |
| 12* | 115939 | SEAL, mastic reg. fluoroelastomer | 1 |
| 13* | 607495 | WASHER | 1 |
| 14 | 607718 | WASHER, seal | 1 |
| 15 | 607496 | SPACER | 2 |
| 16 | 503143 | SCREW, socket head; 5/16–18 x 2.75 in. | 2 |
| 20 | 102726 | PLUG, pipe, 3/4 in. npt | 1 |
| 21 | 100171 | SCREW, machine pnh | 2 |
| 23 | 115861 | BULKHEAD, housing | 1 |
| 24 | 115860 | INSERT, male | 1 |
| 25 | 115862 | CONNECTOR, male | 5 |
| 26 | C19269 | SCREW, machine, slotted | 2 |
| 28 | C19197 | WASHER, plain | 2 |
| 29 | C19800 | SCREW, cap, socket hd | 2 |
| 30 | C34043 | BRACKET | 1 |
| 31 | C34040 | COVER | 1 |
| 32 | C19721 | WASHER | 1 |
| 33 | C32255 | SENSOR, temperature See page 31 electrical diagram | 1 |
| 34 | 198600 | CARTRIDGE, heater See page 31 electrical diagram | 2 |
| 35 | 065345 | WIRE, copper electrical (16AWG); 0.5 ft (0.15 m) See page 31 electrical diagram | 1 |
| 38 | 101674 | TERMINAL, ring See page 31 electrical diagram | 1 |
| 39 | 112144 | SCREW, mach pan hd See page 31 electrical diagram | 1 |
| 44 | 102974 | NUT, hex | 2 |

**Diaphragm Housing / Conversion Kit 915587**
Includes items 101–115

| Ref No. | Part No. | Description | Qty. |
|---|---|---|---|
| 101◆ | --- | HOUSING, diaphragm | 1 |
| 102 | 180978 | WASHER, support | 1 |
| 103◆ | --- | COVER, diaphragm | 1 |
| 104◆ | 180979 | DIAPHRAGM | 1 |
| 105 | 108190 | GAUGE, air pressure; 0–100 psi (0–0.7 MPa, 0–7 bar) range | 1 |
| 106 | 100403 | PLUG, pipe; 1/8–27 npt(f) | 1 |
| 107 | 110341 | REGULATOR, air, relieving; see manual 308167 | 1 |
| 108 | 103656 | NIPPLE, pipe, hex; 1/8–27 npt | 1 |
| 111◆ | 114104 | SCREW, machine | 12 |
| 113 | 180975 | ROD, piston | 1 |
| 114 | 103263 | SCREW, mach; 1/4–20 x 3/4 in. | 1 |
| 115 | 151519 | NIPPLE, 1/4 x 1/8 npt | 1 |

* *Included in Repair Kit 233131.*

◆ *Included in Repair Kit 16P596.*

# Parts

**Model 903958, Series B**
**Spring-Operated Regulator**
Includes items 1–21

**Model 961635, Series C**
**Air-Operated Regulator**
Includes items 1–5, 7, 8, 13–22

△1 Torque to 35–40 ft-lb (47–54 N•m)

△2 Use Loctite® 680 on threads

△3 Use Loctite® 680 on threads.
Torque to 15–25 ft-lb (20–34 N•m)

△4 Lips must face retaining ring (3)

△5 First torque to 30–33 in–lb (3.4–3.7 N•m) in alternating pattern, then torque to 68–72 in–lb (7.7–8.7 N•m) in alternating pattern.

△6 Torque to 12 +/– 2 ft-lb (16 +/– 2.7 N•m)

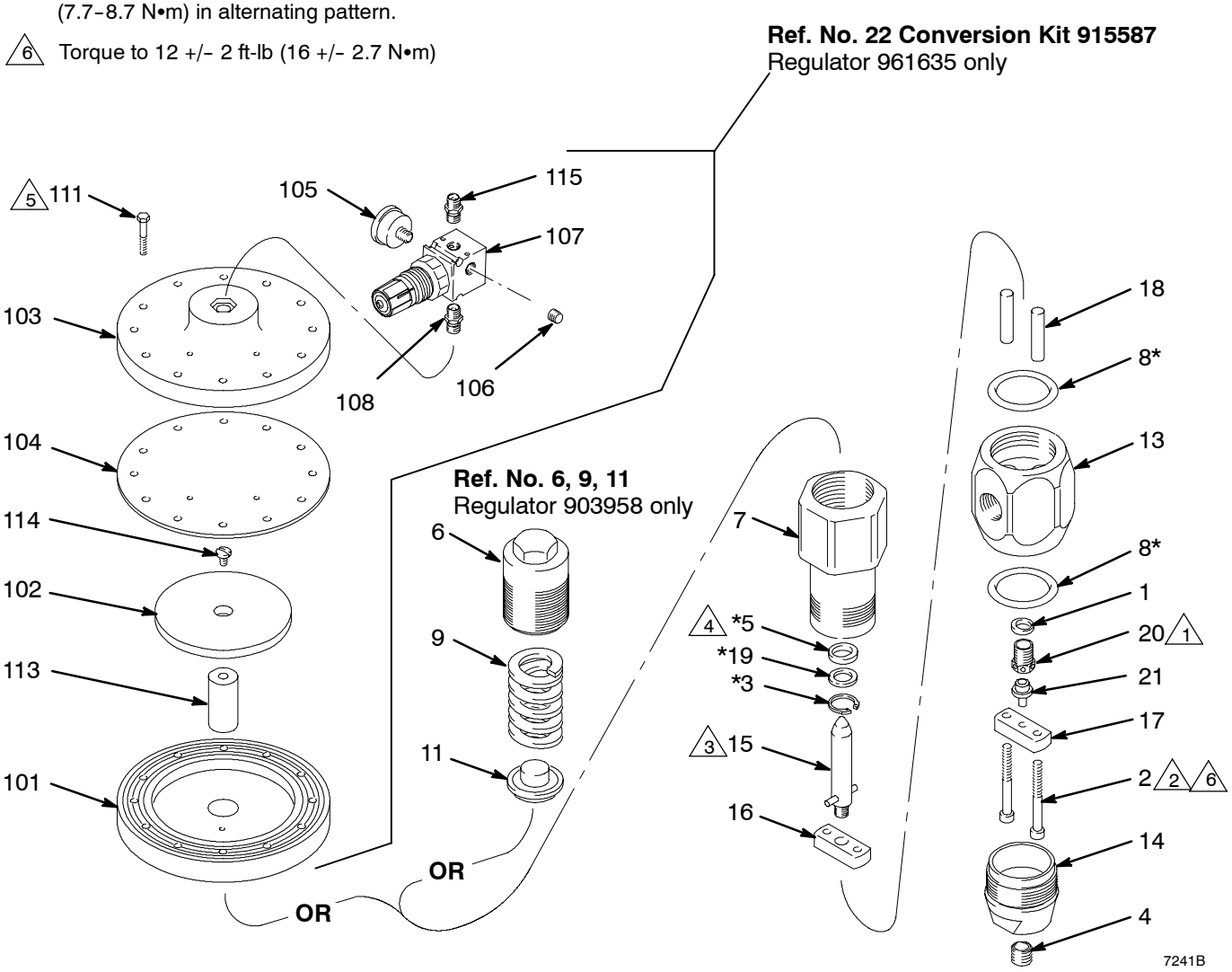

# Parts

**Model 903958, Series B**
**Spring-Operated Regulator**
Includes items 1–21

**Model 961635, Series C**
**Air-Operated Regulator**
Includes items 1–5, 7, 8, 13–22

| Ref No. | Part No. | Description | Qty. |
|---|---|---|---|
| 1 | 607718 | WASHER, seal | 1 |
| 2 | 503143 | SCREW, socket head; 5/16–18 x 2.75 in. | 2 |
| 3* | 102386 | RING, retaining | 1 |
| 4 | 102726 | PLUG, pipe, 3/4 in. npt | 1 |
| 5* | 503140 | SEAL, mastic reg., urethane | 1 |
| 6 | 607501 | SCREW, adjusting; Model 903958 only | 1 |
| 7 | 607500 | CYLINDER, valve | 1 |
| 8* | 115938 | PACKING, o-ring; fluoroelastomer | 2 |
| 9† | 503141 | SPRING, high range; Model 903958 only | 1 |
| 11 | 607493 | GUIDE, spring; Model 903958 only | 1 |
| 13 | 607502 | HOUSING, regulator | 1 |
| 14 | 607499 | CAP, end | 1 |
| 15 | 220899 | PISTON, regulator | 1 |
| 16 | 607497 | BAR, support top | 1 |
| 17 | 607498 | BAR, support bottom | 1 |
| 18 | 607496 | SPACER | 2 |
| 19* | 607495 | WASHER | 1 |
| 20 | 904030 | SEAT, regulator; 0.312 in. (8 mm) dia. | 1 |
| 21 | 904029 | BALL, seat | 1 |
| 22 | 915587 | HOUSING, diaphragm; Model 961635 only (See separate parts list) | 1 |

**Diaphragm Housing / Conversion Kit 915587**
Includes items 101–115

| Ref No. | Part No. | Description | Qty. |
|---|---|---|---|
| 101◆ | --- | HOUSING, diaphragm | 1 |
| 102 | 180978 | WASHER, support | 1 |
| 103◆ | --- | COVER, diaphragm | 1 |
| 104◆ | 180979 | DIAPHRAGM | 1 |
| 105 | 108190 | GAUGE, air pressure; 0–100 psi (0–0.7 MPa, 0–7 bar) range | 1 |
| 106 | 100403 | PLUG, pipe; 1/8–27 npt(f) | 1 |
| 107 | 110341 | REGULATOR, air, relieving; see manual 308167 | 1 |
| 108 | 103656 | NIPPLE, pipe, hex; 1/8–27 npt | 1 |
| 111◆ | 114104 | SCREW, machine | 12 |
| 113 | 180975 | ROD, piston | 1 |
| 114 | 103263 | SCREW, mach; 1/4–20 x 3/4 in. | 1 |
| 115 | 151519 | NIPPLE, 1/4 x 1/8 npt | 1 |

* *Included in Repair Kit 918448.*

† *521079 Low Range Spring is available. See page 31.*

◆ *Included in Repair Kit 16P596.*

# Parts

**Model 244740, Series C**
**Air-Operated Regulator**
Includes items 1–37

1 Torque to 30–40 ft-lb (41–54 N•m)

2 Torque to 75–80 in-lb (8.5–9 N•m)

3 First torque to 30–33 in–lb (3.4–3.7 N•m) in alternating pattern, then torque to 68–72 in–lb (7.7–8.7 N•m) in alternating pattern.

4 Lips must face retaining ring (11)

5 Use Loctite® 680 on threads. Torque to 15–25 ft-lb (20–34 N•m)

6 Torque to 12 +/– 2 ft-lb (16 +/– 2.7 N•m)

7 Use Loctite® 680 on threads.

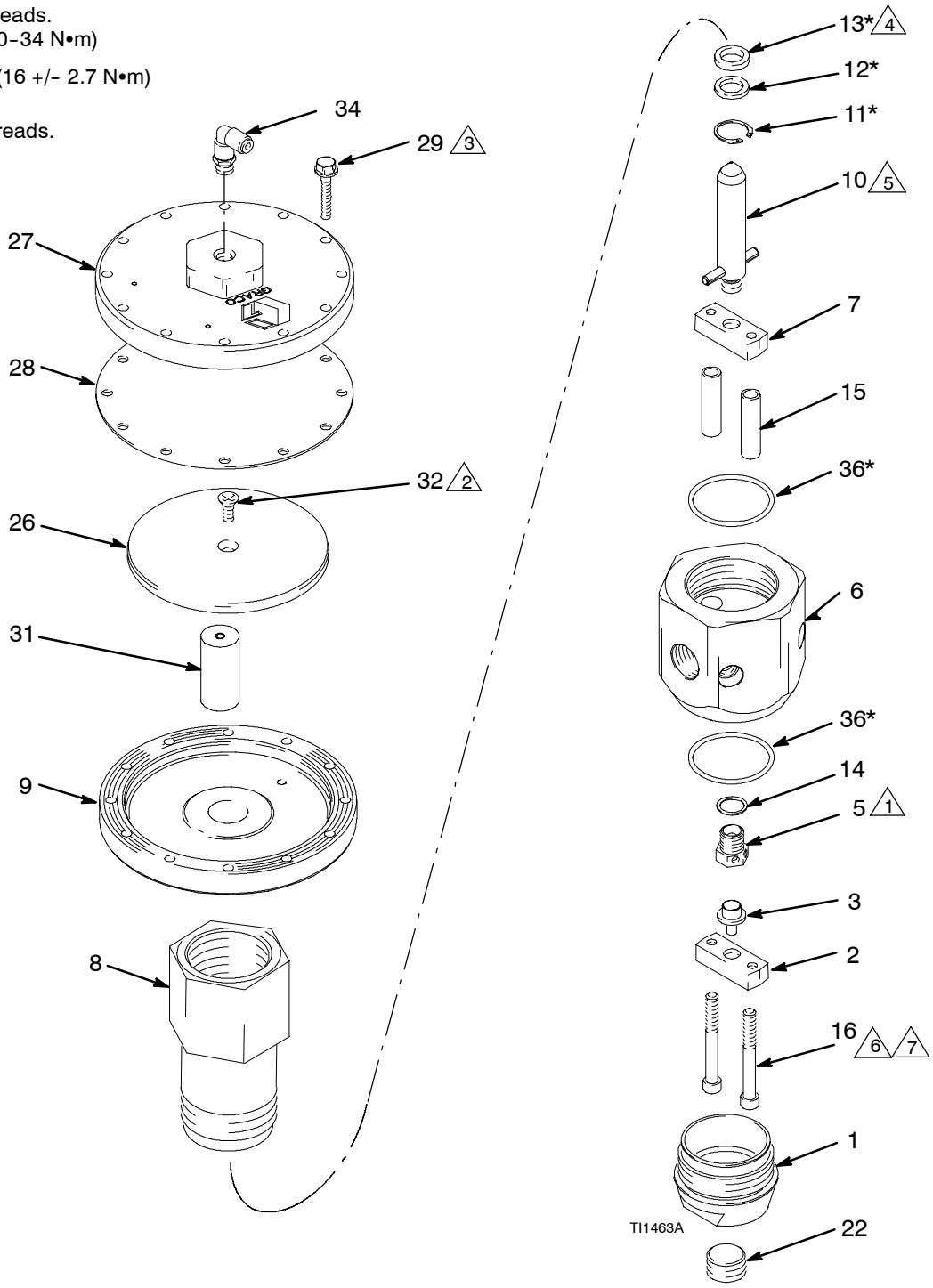

# Parts

**Model 244740, Series C**
**Air-Operated Regulator**
Includes items 1–37

| Ref No. | Part No. | Description | Qty. |
|---|---|---|---|
| 1 | 607499 | CAP, end | 1 |
| 2 | 607498 | BAR, support bottom | 1 |
| 3 | 904029 | BALL, seat | 1 |
| 5 | 904030 | SEAT, regulator; 0.312 in. (8 mm) dia. | 1 |
| 6 | 198007 | HOUSING, regulator | 1 |
| 7 | 607497 | BAR, support top | 1 |
| 8 | 607500 | CYLINDER, valve | 1 |
| 9◆ | --- | HOUSING, diaphragm | 1 |
| 10 | 220899 | PISTON, regulator | 1 |
| 11* | 102386 | RING, retaining | 1 |
| 12* | 607495 | WASHER | 1 |
| 13* | 503140 | SEAL, mastic reg., urethane | 1 |
| 14 | 607718 | WASHER, seal | 1 |
| 15 | 607496 | SPACER | 2 |
| 16 | 503143 | SCREW, socket head; 5/16–18 x 2.75 in. | 2 |
| 22 | 102726 | PLUG, pipe, 3/4 in. npt | 1 |
| 26 | 180978 | WASHER, support | 1 |
| 27◆ | --- | COVER, diaphragm | 1 |
| 28◆ | 180979 | DIAPHRAGM | 1 |
| 29◆ | 114104 | SCREW, machine | 12 |
| 31 | 180975 | ROD, piston | 1 |
| 32 | 103263 | SCREW, machine; 1/4–20 x 3/4 in. | 1 |
| 34 | 198171 | ELBOW | 1 |
| 35 | 198241 | PLUG, port, pressure (not shown) | 4 |
| 36* | 115938 | PACKING, o–ring | 2 |
| 37 | 111457 | PACKING, o–ring, pressure port (not shown) | 4 |

** Included in Repair Kit 918448.*

◆ *Included in Repair Kit 16P596.*

# Parts

**Model C58318**
**Stainless Steel, Air Operated Regulator**

1 Torque to 35-40 ft-lb (47-54 N•m)

2 Use Loctite® 680 on threads

3 Use Loctite® 680 on threads.
Torque to 15-25 ft-lb (20-34 N•m)

4 Lips must face retaining ring (16)

5 First torque to 30-33 in-lb (3.4-3.7 N•m) in alternating pattern, then torque to 68-72 in-lb (7.7-8.7 N•m) in alternating pattern.

6 Torque to 12 +/- 2 ft-lb (16 +/- 2.7 N•m)

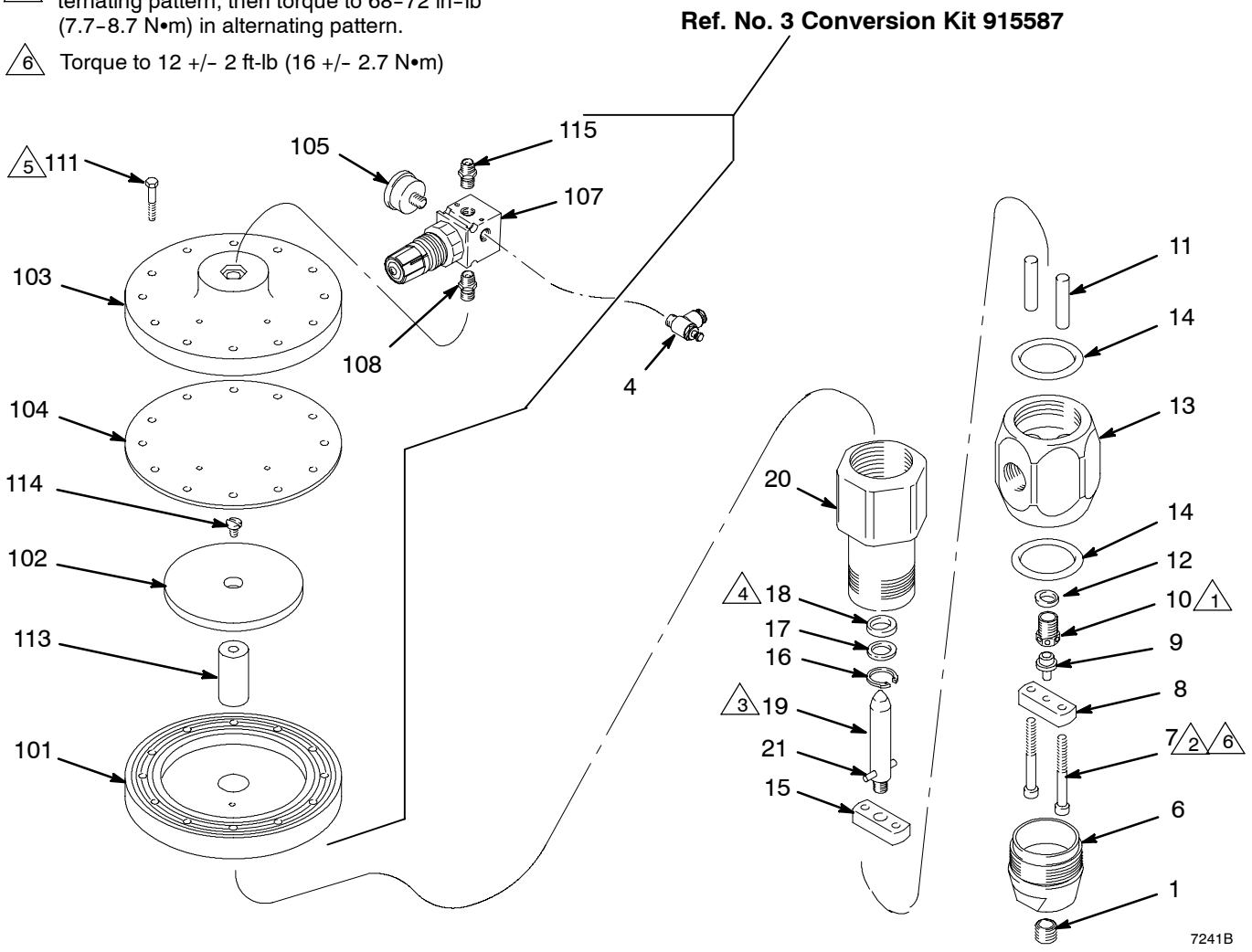

# Parts

**Model C58318**
**Stainless Steel, Air Operated Regulator**

| Ref No. | Part No. | Description | Qty. |
|---|---|---|---|
| 1 | 111384 | PLUG, pipe | 1 |
| 3 | 915587 | HOUSING, diaphragm (See separate parts list) | 1 |
| 4 | C06234 | VALVE, flow control | 1 |
| 6 | 607499 | CAP, end | 1 |
| 7 | C55143 | SCREW, cap, socket head | 2 |
| 8 | C55136 | SUPPORT, piston, bottom | 1 |
| 9 | C55140 | STEM, valve assy | 1 |
| 10 | C55139 | SEAT, regulator, assy | 1 |
| 11 | C55137 | SPACER | 2 |
| 12 | C55133 | WASHER, seal | 1 |
| 13 | C55134 | HOUSING, regulator | 1 |
| 14 | 115938 | PACKING, o-ring | 2 |
| 15 | C55135 | SUPPORT, piston, top | 1 |
| 16 | C20385 | RING, retaining, internal | 1 |
| 17 | C58314 | SUPPORT, seal | 1 |
| 18 | 515716 | PACKING, u-cup | 1 |
| 19 | C55141 | PISTON, regulator | 1 |
| 20 | C58312 | CYLINDER, regulator | 1 |
| 21 | C55142 | PIN, str, spring | 1 |

**Diaphragm Housing / Conversion Kit 915587**
Includes items 101–115

| Ref No. | Part No. | Description | Qty. |
|---|---|---|---|
| 101◆ | --- | HOUSING, diaphragm | 1 |
| 102 | 180978 | WASHER, support | 1 |
| 103◆ | --- | COVER, diaphragm | 1 |
| 104◆ | 180979 | DIAPHRAGM | 1 |
| 105 | 108190 | GAUGE, air pressure; 0–100 psi (0–0.7 MPa, 0–7 bar) range | 1 |
| 106 | 100403 | PLUG, pipe; 1/8–27 npt(f) (not shown) | 1 |
| 107 | 110341 | REGULATOR, air, relieving; see manual 308167 | 1 |
| 108 | 103656 | NIPPLE, pipe, hex; 1/8–27 npt | 1 |
| 111◆ | 114104 | SCREW, machine | 12 |
| 113 | 180975 | ROD, piston | 1 |
| 114 | 103263 | SCREW, mach; 1/4–20 x 3/4 in. | 1 |
| 115 | 151519 | NIPPLE, 1/4 x 1/8 npt | 1 |

◆ *Included in Repair Kit 16P596.*

# Parts

**Model 918447 Heated Regulator**

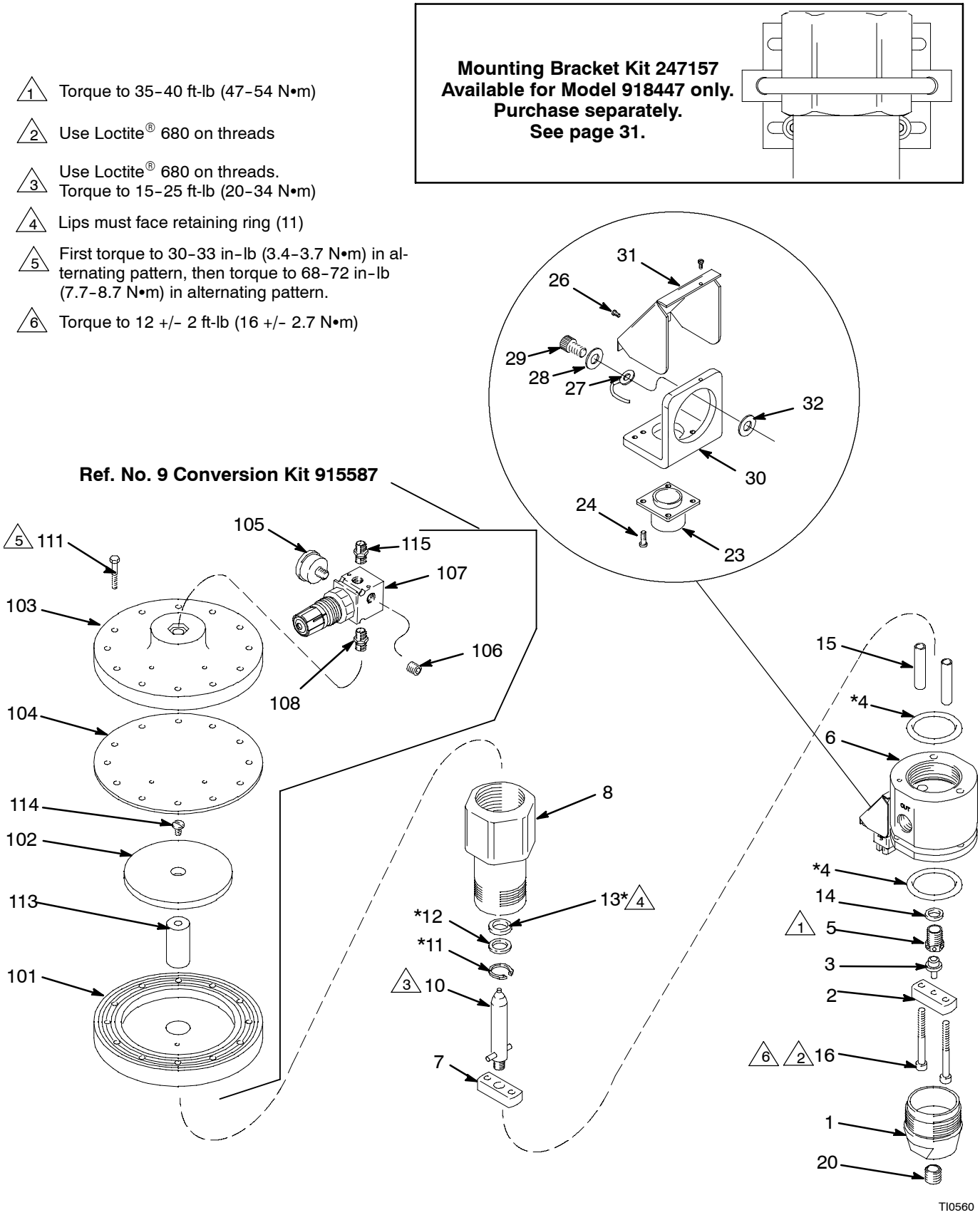

# Parts

**Model 918447 Heated Regulator**

| Ref No. | Part No. | Description | Qty. |
|---|---|---|---|
| 1 | 607499 | CAP, end | 1 |
| 2 | 607498 | BAR, support | 1 |
| 3 | 904029 | BALL, seat | 1 |
| 4* | 115938 | PACKING, o-ring | 2 |
| 5 | 904030 | SEAT, regulator | 1 |
| 6 | 617434 | HOUSING, heated, regulator | 1 |
| 7 | 607497 | SUPPORT, piston | 1 |
| 8 | 607500 | CYLINDER, valve | 1 |
| 9 | 915587 | HOUSING, diaphragm (See separate parts list) | 1 |
| 10 | 220899 | PISTON, regulator | 1 |
| 11* | 102386 | RING, retaining | 1 |
| 12* | 607495 | WASHER | 1 |
| 13* | 115939 | SEAL, rod, .750 ID, fluoroelastomer | 1 |
| 14 | 607718 | WASHER, seal | 1 |
| 15 | 607496 | SPACER | 2 |
| 16 | 503143 | SCREW, cap, sch | 2 |
| 20 | 102726 | PLUG, pipe, headless | 1 |
| 23 | C07329 | CONNECTOR, 6-pin gun | 1 |
| 24 | C19950 | SCREW, cap, sch | 4 |
| 25 | 102794 | NUT, hex | 4 |
| 26 | C19269 | SCREW, mach, slotted hd | 2 |
| 27 | C50019 | TERMINAL, ring | 1 |
| 28 | C19197 | WASHER, plain | 2 |
| 29 | C19800 | SCREW, cap, socket hd | 2 |
| 30 | C34043 | BRACKET | 1 |
| 31 | C34040 | COVER | 1 |
| 32 | C19721 | WASHER | 1 |
| 33 | C32255 | SENSOR, temperature See page 31 electrical diagram | 1 |
| 34 | C31034 | HEATER, cartridge See page 31 electrical diagram | 2 |

**Diaphragm Housing / Conversion Kit 915587**
Includes items 101-115

| Ref No. | Part No. | Description | Qty. |
|---|---|---|---|
| 101◆ | --- | HOUSING, diaphragm | 1 |
| 102 | 180978 | WASHER, support | 1 |
| 103◆ | --- | COVER, diaphragm | 1 |
| 104◆ | 180979 | DIAPHRAGM | 1 |
| 105 | 108190 | GAUGE, air pressure; 0-100 psi (0-0.7 MPa, 0-7 bar) range | 1 |
| 106 | 100403 | PLUG, pipe; 1/8-27 npt(f) | 1 |
| 107 | 110341 | REGULATOR, air, relieving; see manual 308167 | 1 |
| 108 | 103656 | NIPPLE, pipe, hex; 1/8-27 npt | 1 |
| 111◆ | 114104 | SCREW, machine | 12 |
| 113 | 180975 | ROD, piston | 1 |
| 114 | 103263 | SCREW, mach; 1/4-20 x 3/4 in. | 1 |
| 115 | 151519 | NIPPLE, 1/4 x 1/8 npt | 1 |

* *Included in Repair Kit 233131.*

◆ *Included in Repair Kit 16P596.*

# Parts

**Model 246642, Series C**
**Air-Operated Regulator**
Includes items 1–38

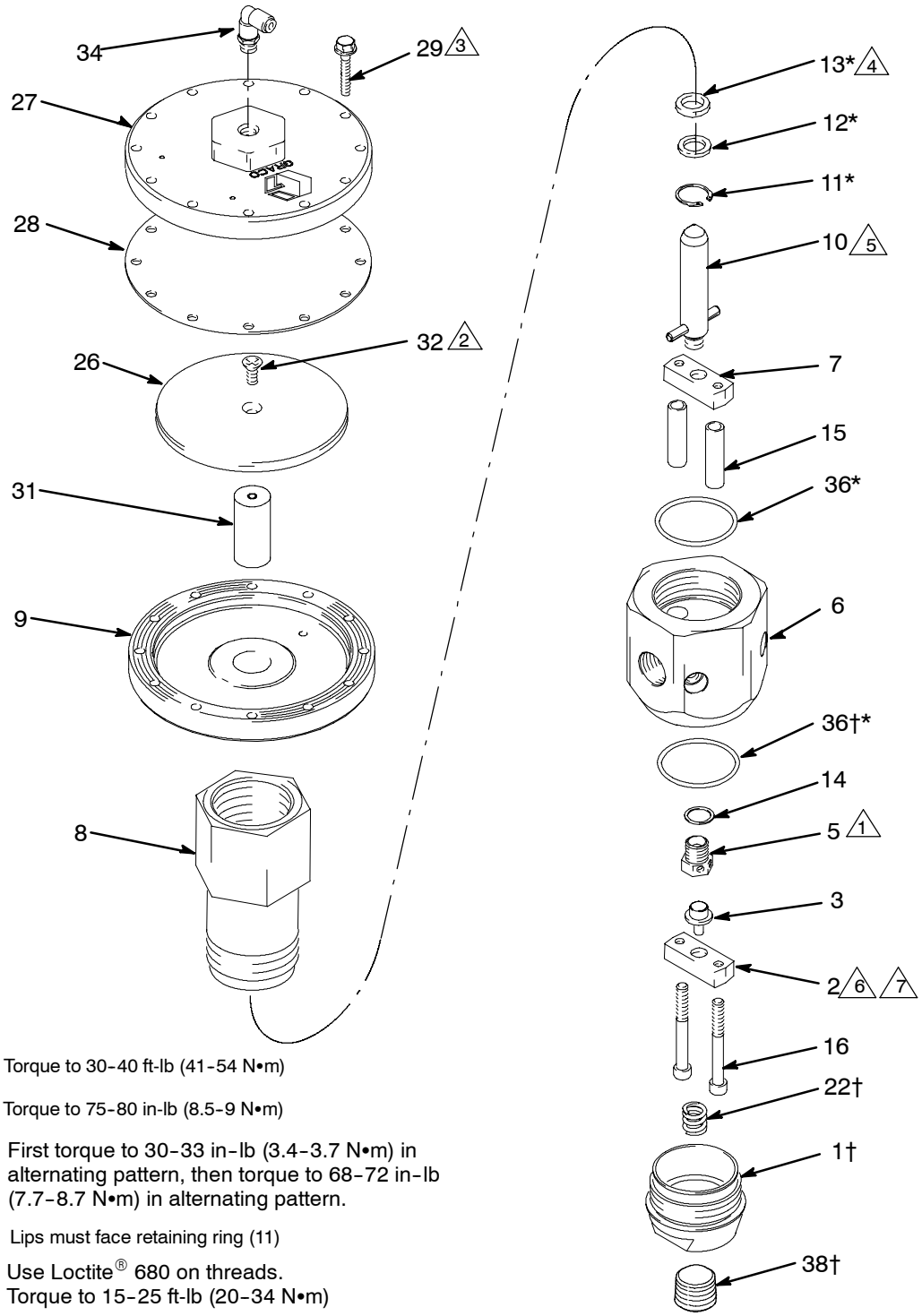


1 Torque to 30–40 ft-lb (41–54 N•m)

2 Torque to 75–80 in-lb (8.5–9 N•m)

3 First torque to 30–33 in-lb (3.4–3.7 N•m) in alternating pattern, then torque to 68–72 in-lb (7.7–8.7 N•m) in alternating pattern.

4 Lips must face retaining ring (11)

5 Use Loctite® 680 on threads.
Torque to 15–25 ft-lb (20–34 N•m)

6 Use Loctite® 680 on threads.

7 Torque to 12 +/– 2 ft-lb (16 +/– 2.7 N•m)

# Parts

**Model 246642, Series C**
**Air-Operated Regulator**
Includes items 1–37

| Ref No. | Part No. | Description | Qty. |
|---|---|---|---|
| 1† | 15C280 | CAP, end | 1 |
| 2 | 607498 | BAR, support bottom | 1 |
| 3 | 904029 | BALL, seat | 1 |
| 5 | 904030 | SEAT, regulator; 0.312 in. (8 mm) dia. | 1 |
| 6 | 198007 | HOUSING, regulator | 1 |
| 7 | 607497 | BAR, support top | 1 |
| 8 | 607500 | CYLINDER, valve | 1 |
| 9◆ | --- | HOUSING, diaphragm | 1 |
| 10 | 220899 | PISTON, regulator | 1 |
| 11* | 102386 | RING, retaining | 1 |
| 12* | 607495 | WASHER | 1 |
| 13* | 503140 | SEAL, mastic reg., urethane | 1 |
| 14 | 607718 | WASHER, seal | 1 |
| 15 | 607496 | SPACER | 2 |
| 16 | 503143 | SCREW, socket head; 5/16–18 x 2.75 in. | 2 |
| 22† | 15C281 | SPRING, compression | 1 |
| 26 | 180978 | WASHER, support | 1 |
| 27◆ | --- | COVER, diaphragm | 1 |
| 28◆ | 180979 | DIAPHRAGM | 1 |
| 29◆ | 114104 | SCREW, machine | 12 |
| 31 | 180975 | ROD, piston | 1 |
| 32 | 103263 | SCREW, machine; 1/4–20 x 3/4 in. | 1 |
| 34 | 198171 | ELBOW | 1 |
| 35 | 198241 | PLUG, port, pressure (not shown) | 4 |
| 36†* | 115938 | PACKING, o–ring | 2 |
| 37 | 111457 | PACKING, o–ring, pressure port (not shown) | 4 |
| 38† | 100721 | PLUG, pipe | 1 |

* *Included in Repair Kit 918448.*

† *Included in Repair Kit 246728.*

◆ *Included in Repair Kit 16P596.*

# Parts

**Model 246687 and 262549, Series A**
**Air-Operated Regulator**

△1 Torque to 35–40 ft-lb (47–54 N•m)

△2 Use Loctite® 680 on threads

△3 Use Loctite® 680 on threads.
Torque to 15–25 ft-lb (20–34 N•m)

△4 Lips must face retaining ring (3)

△5 First torque to 30–33 in–lb (3.4–3.7 N•m) in alternating pattern, then torque to 68–72 in–lb (7.7–8.7 N•m) in alternating pattern.

△6 Torque to 12 +/– 2 ft-lb (16 +/– 2.7 N•m)

**Ref. No. 22 Conversion Kit 915587**

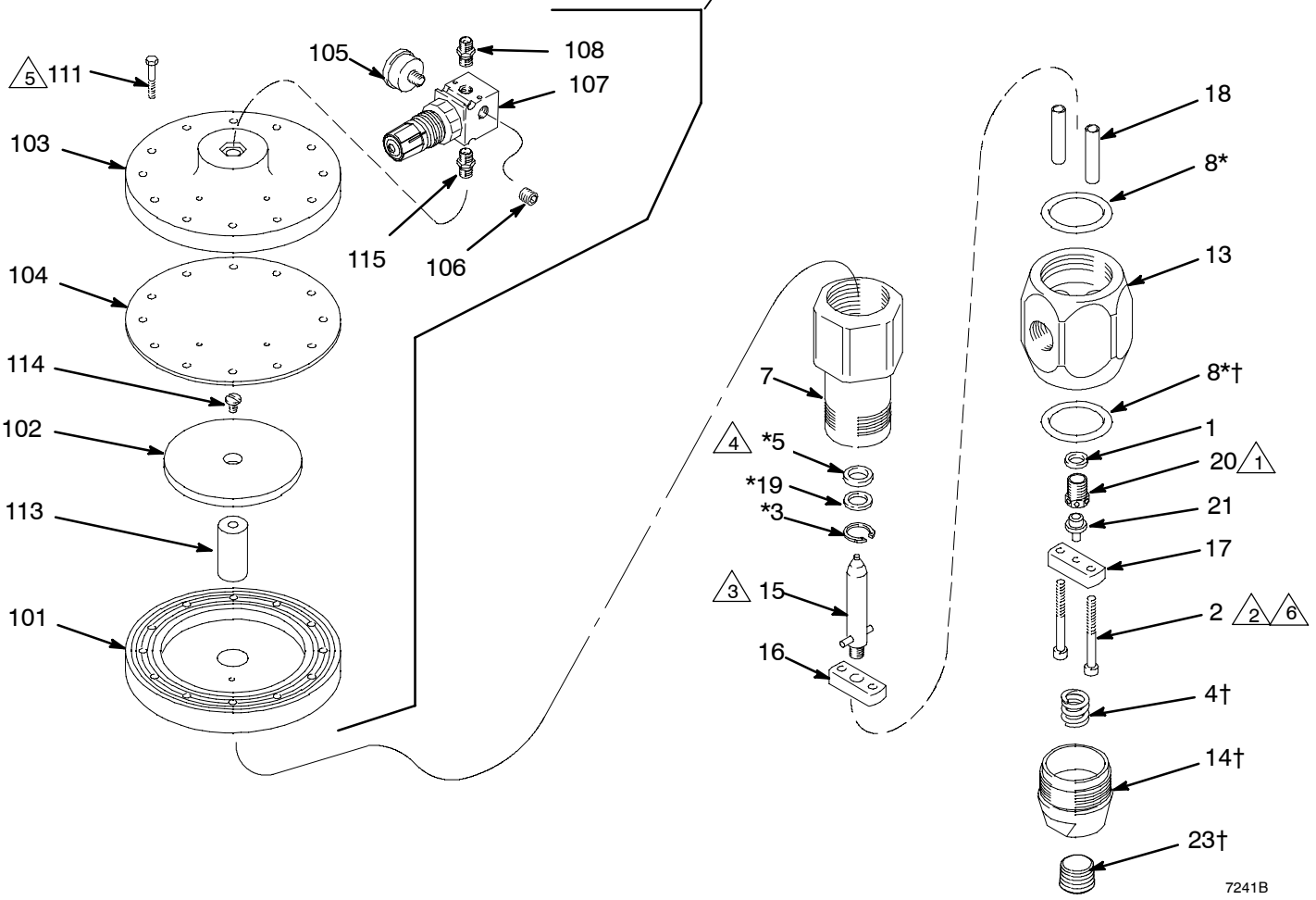

# Parts

**Model 246687 and 262549, Series A Air-Operated Regulator**

| Ref No. | Part No. | Description | Qty. |
|---|---|---|---|
| 1 | 607718 | WASHER, seal | 1 |
| 2 | 503143 | SCREW, socket head; 5/16–18 x 2.75 in. | 2 |
| 3* | 102386 | RING, retaining | 1 |
| 4† | 15C281 | SPRING, compression | 1 |
| 5* | 503140 | SEAL, mastic reg., urethane | 1 |
| 7 | 607500 | CYLINDER, valve | 1 |
| 8*† | 115938 | PACKING, o-ring; fluoroelastomer | 2 |
| 13 | 607502 | HOUSING, regulator | 1 |
| 14† | 15C280 | CAP, end | 1 |
| 15 | 220899 | PISTON, regulator | 1 |
| 16 | 607497 | BAR, support top | 1 |
| 17 | 607498 | BAR, support bottom | 1 |
| 18 | 607496 | SPACER | 2 |
| 19* | 607495 | WASHER | 1 |
| 20 | 904030 | SEAT, regulator; 0.312 in. (8 mm) dia. | 1 |
| 21 | 904029 | BALL, seat | 1 |
| 22 | 915587 | HOUSING, diaphragm (See parts list at right) | 1 |
| 23† | 100721 | PLUG, pipe | 1 |

**Diaphragm Housing / Conversion Kit 915587**

| Ref No. | Part No. | Description | Qty. |
|---|---|---|---|
| 101◆ | --- | HOUSING, diaphragm | 1 |
| 102 | 180978 | WASHER, support | 1 |
| 103◆ | --- | COVER, diaphragm | 1 |
| 104◆ | 180979 | DIAPHRAGM | 1 |
| 105 | 108190 | GAUGE, air pressure; 0–100 psi (0–0.7 MPa, 0–7 bar) range | 1 |
| 106 | 100403 | PLUG, pipe; 1/8–27 npt(f) | 1 |
| 107 | 110341 | REGULATOR, air, relieving; model 246687 only, see manual 308167 | 1 |
| | 16G409 | REGULATOR, air, relieving; model 262549 only, see manual 308167 | 1 |
| 108 | 156971 | NIPPLE, 1/4–18 npt (for 262549) | 1 |
| 111◆ | 114104 | SCREW, washer | 12 |
| 113 | 180975 | ROD, piston | 1 |
| 114 | 103263 | SCREW, mach; 1/4–20 x 3/4 in. | 1 |
| 115 | 151519 | NIPPLE, 1/4 x 1/8 npt | 1 |

* *Included in Repair Kit 918448.*

† *Included in Repair Kit 246728.*

◆ *Included in Repair Kit 16P596.*

# Parts

**Model 246643, 240 Volt Heated Regulator**

△1 Torque to 35-40 ft-lb (47-54 N•m)

△2 Use Loctite® 680 on threads

△3 Use Loctite® 680 on threads.
Torque to 15-25 ft-lb (20-34 N•m)

△4 Lips must face retaining ring (11)

△5 First torque to 30-33 in-lb (3.4-3.7 N•m) in alternating pattern, then torque to 68-72 in-lb (7.7-8.7 N•m) in alternating pattern.

△6 Torque to 12 +/- 2 ft-lb (16 +/- 2.7 N•m)

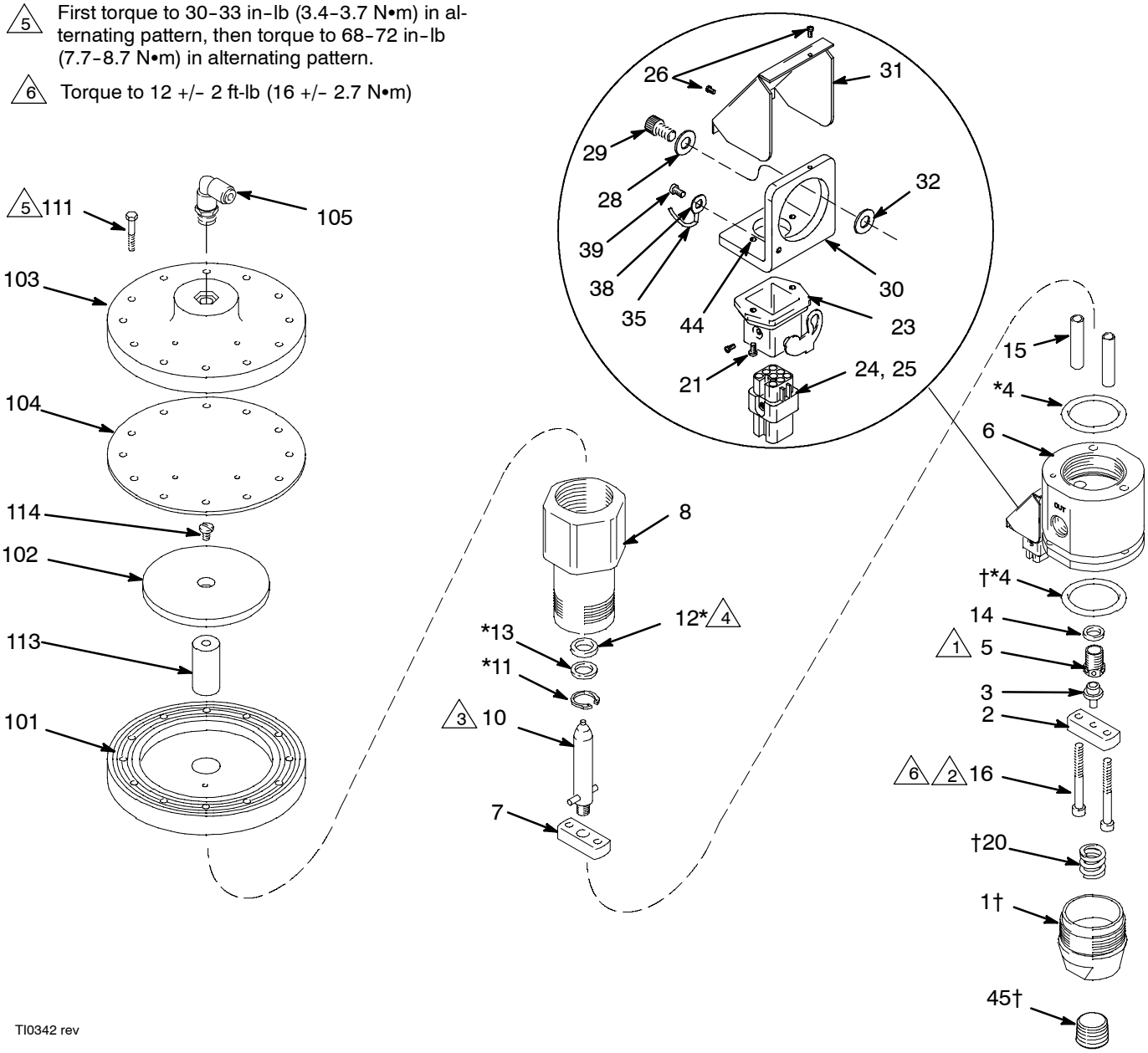

# Parts

**Model 246643, 240 Volt Heated Regulator**

| Ref No. | Part No. | Description | Qty. |
|---|---|---|---|
| 1† | 15C280 | CAP, end | 1 |
| 2 | 607498 | BAR, support bottom | 1 |
| 3 | 904029 | BALL, seat | 1 |
| 4*† | 115938 | PACKING, o-ring; fluoroelastomer | 2 |
| 5 | 904030 | SEAT, regulator | 1 |
| 6 | 617434 | HOUSING, regulator | 1 |
| 7 | 607497 | SUPPORT, piston | 1 |
| 8 | 607500 | CYLINDER, valve | 1 |
| 10 | 220899 | PISTON, regulator | 1 |
| 11* | 102386 | RING, retaining | 1 |
| 12* | 115939 | SEAL, mastic reg. fluoroelastomer | 1 |
| 13* | 607495 | WASHER | 1 |
| 14 | 607718 | WASHER, seal | 1 |
| 15 | 607496 | SPACER | 2 |
| 16 | 503143 | SCREW, socket head; 5/16–18 x 2.75 in. | 2 |
| 20† | 15C281 | SPRING, compression | 1 |
| 21 | 100171 | SCREW, machine pnh | 2 |
| 23 | 115861 | BULKHEAD, housing | 1 |
| 24 | 115860 | INSERT, male | 1 |
| 25 | 115862 | CONNECTOR, male | 5 |
| 26 | C19269 | SCREW, machine, slotted | 2 |
| 28 | C19197 | WASHER, plain | 2 |
| 29 | C19800 | SCREW, cap, socket hd | 2 |
| 30 | C34043 | BRACKET | 1 |
| 31 | C34040 | COVER | 1 |
| 32 | C19721 | WASHER | 1 |
| 33 | C32255 | SENSOR, temperature See page 31 electrical diagram | 1 |
| 34 | 198600 | CARTRIDGE, heater See page 31 electrical diagram | 2 |
| 35 | 065345 | WIRE, copper electrical (16AWG); 0.5 ft (0.15 m) See page 31 electrical diagram | 1 |
| 38 | 101674 | TERMINAL, ring See page 31 electrical diagram | 1 |
| 39 | 112144 | SCREW, mach pan hd See page 31 electrical diagram | 1 |
| 44 | 102974 | NUT, hex | 2 |
| 45† | 100721 | PLUG, pipe | 1 |

| Ref No. | Part No. | Description | Qty. |
|---|---|---|---|
| 101◆ | --- | HOUSING, diaphragm | 1 |
| 102 | 180978 | WASHER, support | 1 |
| 103◆ | --- | COVER, diaphragm | 1 |
| 104◆ | 180979 | DIAPHRAGM | 1 |
| 105 | 198171 | ELBOW | 1 |
| 111◆ | 114104 | SCREW, machine | 12 |
| 113 | 180975 | ROD, piston | 1 |
| 114 | 103263 | SCREW, mach; 1/4–20 x 3/4 in. | 1 |

* *Included in Repair Kit 233131.*

† *Included in Repair Kit 246728.*

◆ *Included in Repair Kit 16P596.*

# Parts

**Model 246688, 240 Volt Heated Regulator**

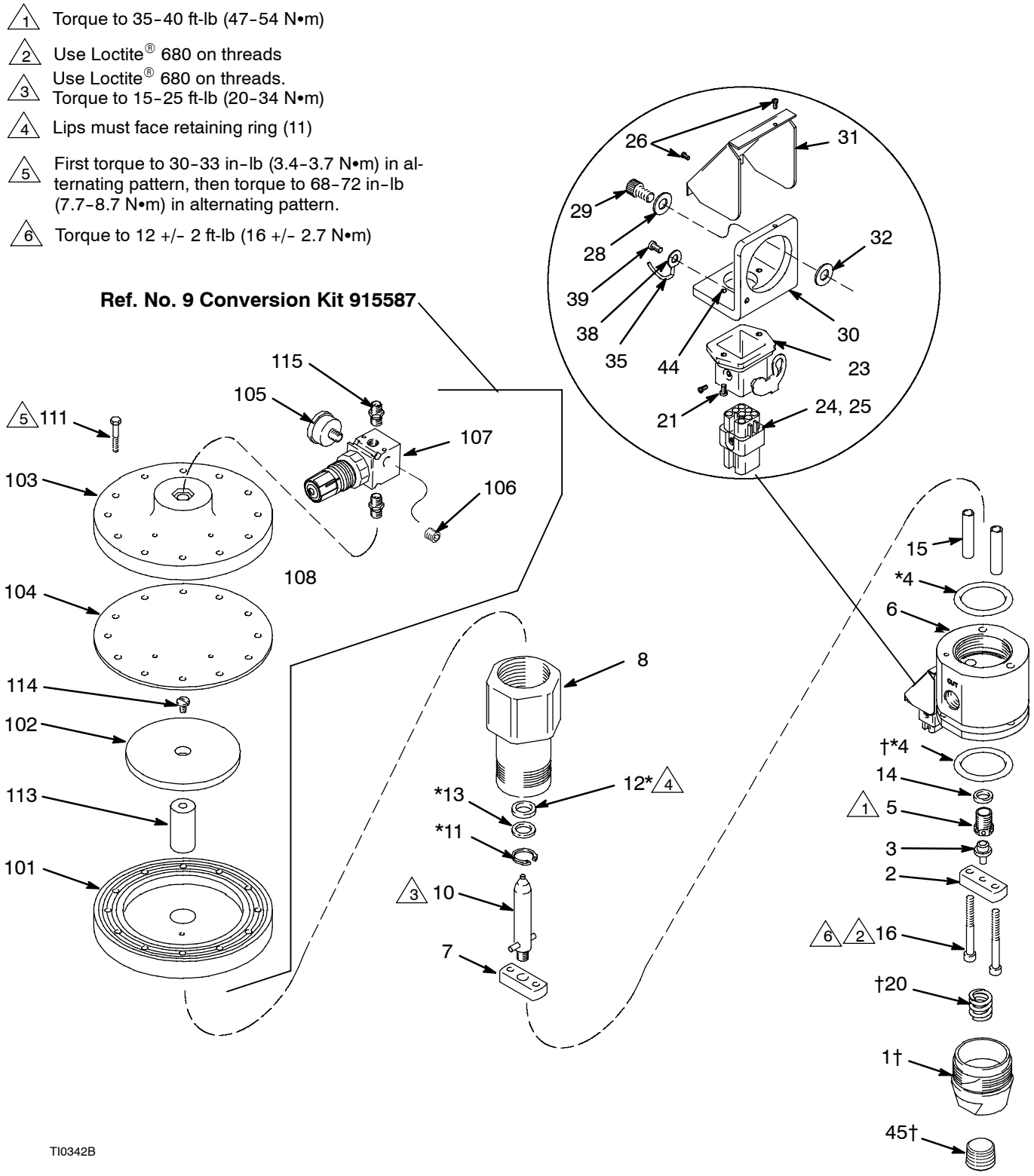

# Parts

**Model 246688, 240 Volt Heated Regulator**

| Ref No. | Part No. | Description | Qty. |
|---|---|---|---|
| 1† | 15C280 | CAP, end | 1 |
| 2 | 607498 | BAR, support bottom | 1 |
| 3 | 904029 | BALL, seat | 1 |
| 4*† | 115938 | PACKING, o-ring; fluoroelastomer | 2 |
| 5 | 904030 | SEAT, regulator | 1 |
| 6 | 617434 | HOUSING, regulator | 1 |
| 7 | 607497 | SUPPORT, piston | 1 |
| 8 | 607500 | CYLINDER, valve | 1 |
| 9 | 915587 | HOUSING, diaphragm (See separate parts list) | 1 |
| 10 | 220899 | PISTON, regulator | 1 |
| 11* | 102386 | RING, retaining | 1 |
| 12* | 115939 | SEAL, mastic reg. fluoroelastomer | 1 |
| 13* | 607495 | WASHER | 1 |
| 14 | 607718 | WASHER, seal | 1 |
| 15 | 607496 | SPACER | 2 |
| 16 | 503143 | SCREW, socket head; 5/16–18 x 2.75 in. | 2 |
| 20† | 15C281 | SPRING, compression | 1 |
| 21 | 100171 | SCREW, machine pnh | 2 |
| 23 | 115861 | BULKHEAD, housing | 1 |
| 24 | 115860 | INSERT, male | 1 |
| 25 | 115862 | CONNECTOR, male | 5 |
| 26 | C19269 | SCREW, machine, slotted | 2 |
| 28 | C19197 | WASHER, plain | 2 |
| 29 | C19800 | SCREW, cap, socket hd | 2 |
| 30 | C34043 | BRACKET | 1 |
| 31 | C34040 | COVER | 1 |
| 32 | C19721 | WASHER | 1 |
| 33 | C32255 | SENSOR, temperature See page 31 electrical diagram | 1 |
| 34 | 198600 | CARTRIDGE, heater See page 31 electrical diagram | 2 |
| 35 | 065345 | WIRE, copper electrical (16AWG); 0.5 ft (0.15 m) See page 31 electrical diagram | 1 |
| 38 | 101674 | TERMINAL, ring See page 31 electrical diagram | 1 |
| 39 | 112144 | SCREW, mach pan hd See page 31 electrical diagram | 1 |
| 44 | 102974 | NUT, hex | 2 |
| 45† | 100721 | PLUG, pipe | 1 |

**Diaphragm Housing / Conversion Kit 915587**
Includes items 101–115

| Ref No. | Part No. | Description | Qty. |
|---|---|---|---|
| 101◆ | --- | HOUSING, diaphragm | 1 |
| 102 | 180978 | WASHER, support | 1 |
| 103◆ | --- | COVER, diaphragm | 1 |
| 104◆ | 180979 | DIAPHRAGM | 1 |
| 105 | 108190 | GAUGE, air pressure; 0–100 psi (0–0.7 MPa, 0–7 bar) range | 1 |
| 106 | 100403 | PLUG, pipe; 1/8–27 npt(f) | 1 |
| 107 | 110341 | REGULATOR, air, relieving; see manual 308167 | 1 |
| 108 | 103656 | NIPPLE, pipe, hex; 1/8–27 npt | 1 |
| 111◆ | 114104 | CAPSCREW, hex washer hd; 1/4–20 x 1.5 | 12 |
| 113 | 180975 | ROD, piston | 1 |
| 114 | 103263 | SCREW, mach; 1/4–20 x 3/4 in. | 1 |
| 115 | 151519 | NIPPLE, 1/4 x 1/8 npt | 1 |

* *Included in Repair Kit 233131.*

† *Included in Repair Kit 246728.*

◆ *Included in Repair Kit 16P596.*

# Dimensions

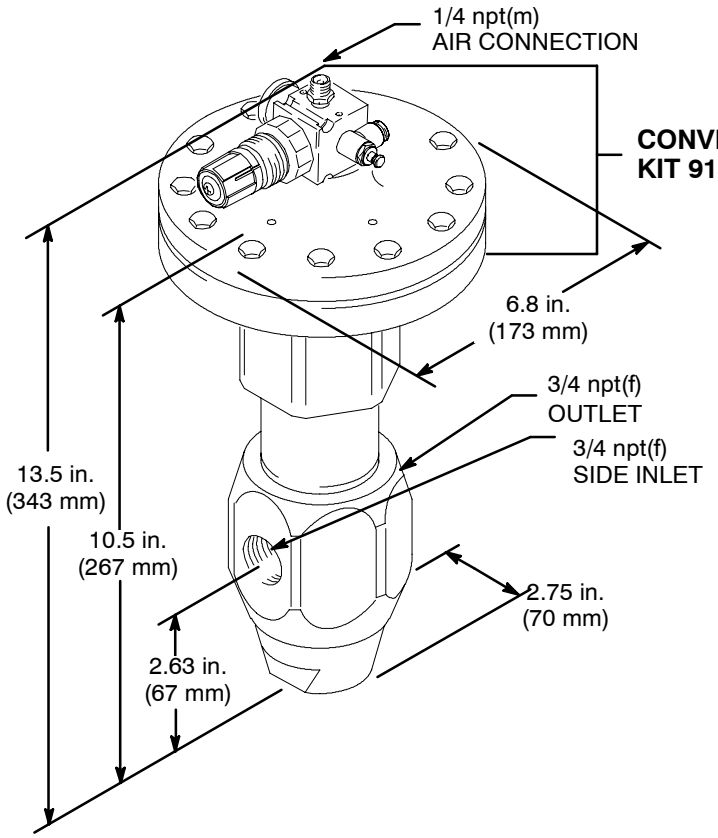


**Models 961635, C58318, 243700, C59584, 244740, 246642, 246643, 246687, and 246688.**

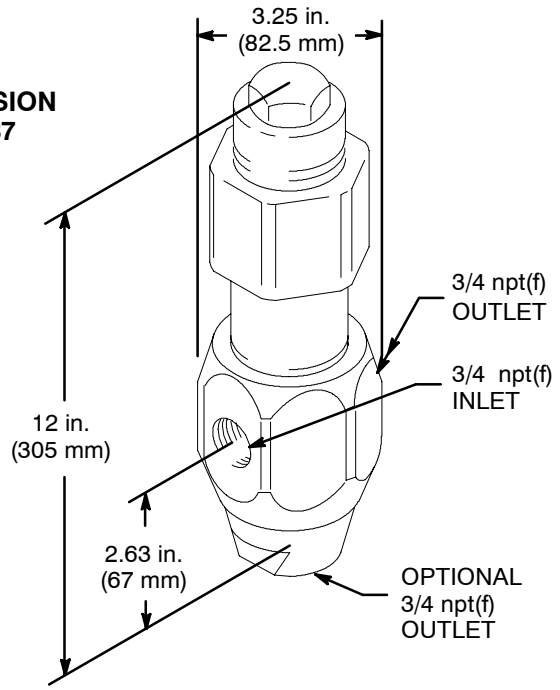


**Model 903958 and C58318**

7243B

# Wiring Diagram

## These regulators are controlled by Graco Therm-O-Flow controls.

120 Volt Models 918447

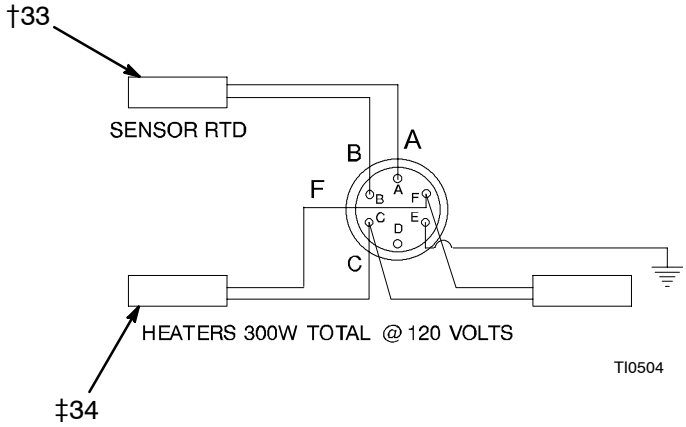


† 108.2 Ω (+/- 1.1 Ω @ 70°F)

‡ 96 Ω (+9.6 Ω /–14.4 @ Ω each)

Resistance measurements across pins C and F = 40.8 - 52.8 Ω

NOTE: Allow sufficient lead wire length to be able to rotate connector bracket +/-180°

---

## This regulator is controlled by Graco Therm-O-Flow Plus controls.

240 Volt Model 243700, 246643, and 246688

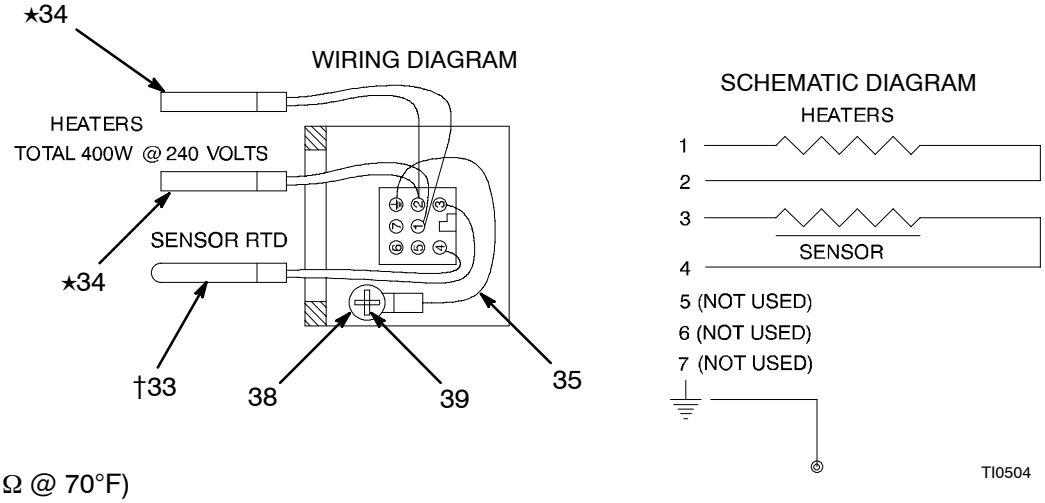


† 108.2 Ω (+/- 1.1 Ω @ 70°F)

★ 288 Ω (+28.8 Ω /–14.4 @ Ω each)

Resistance measurements across pins 1 and 2 = 136.8 - 158.4 Ω

# Technical Data

| Category | Data |
|---|---|
| Regulated Fluid Pressure Range | *Models 961635, C58318, and 244740*<br>250–4500 psi (1.7–31.0 MPa, 17–310 bar)<br>*Models 243700 and 918447*<br>250–3500 psi (1.7–24.1 MPa, 17–241 bar)<br>*Model 903958*<br>High Range: 1000–4500 psi (7.0–31.0 MPa, 70–310 bar)<br>Low Range: 400–1000 psi (2.8–7.0 MPa, 28–70 bar)<br>*Models 246642 and 246687*<br>100–4500 psi (0.7–31.0 MPa, 7–310 bar)<br>*Model 246643 and 246688*<br>100–3500 psi (0.7–24.1 MPa, 7–241 bar) |
| Maximum Fluid Inlet Pressure | 5000 psi (34.4 MPa, 344 bar) |
| Maximum Fluid Temperatures<br>Ambient or conditioned<br>Heated | <br>140°F (60°C)<br>400°F (202°C) |
| Pressure Drop (Measured at 400 psi inlet pressure and 1.5 gpm) | Viscosity of 25,000 CPS: 100 psid<br>Viscosity of 80,000 CPS: 375 psid |
| Wetted Parts 903958, 961635, 244740, 246642, and 246687 | zinc-plated carbon steel, brass, stainless steel, fluoroelastomer, urethane, tungsten carbide |
| Wetted Parts 243700, 918447, 246643, and 246688 | zinc-plated carbon steel, brass, stainless steel, fluoroelastomer, tungsten carbide |
| Wetted Parts C58318 | 303, 304, 316 stainless steel, tungsten carbide, UHMWPE, fluoroelastomer, PTFE |
| Inlet (one) | 3/4 npt(f), at side |
| Outlets (two) | 3/4 npt(f), at side and bottom, at side only on 246642, 246643, 246687, 246688, and 262549. |
| Weights | *Air Operated Model 961635:* 17.75 lb (7.9 kg)<br>*Spring Operated Model 903958:* 13.5 lb (6.1 kg) |

Loctite® is a registered trademark of the Loctite Corporation.

# Accessories

### 113654 Fluid Pressure Gauge
Maximum pressure: 5000 psi (34 MPa, 340 bar). 1/4 npt(m). Requires bushing (100615).

### 521079 Low Range Conversion Spring
Replaces the original spring in the 903958 regulator when 400–1000 psi (2.8–7.0 MPa, 28–70 bar) regulated pressure range is required.

### C06234 Bleed Valve (3/8 NPT)
Adjustable air regulator bleed for improved fluid pressure accuracy. Replaces the plug in air regulator outlet port.

### 915587 Spring to Air Conversion Kit
Converts an existing 903958 spring-operated regulator to an air-operated regulator

### 246728 Spring Loaded Fluid Section Conversion Kit
Replaces end cap 607499 with 15C280 and adds spring 15C281. Allows for lower regulated outlet fluid pressure. O–rings are shipped for all regulator assemblies.

### 247157 Mounting Bracket Kit
Available for Model 918447 only.

# Graco Standard Warranty

Graco warrants all equipment manufactured by Graco and bearing its name to be free from defects in material and workmanship on the date of sale to the original purchaser for use. With the exception of any special, extended, or limited warranty published by Graco, Graco will, for a period of twelve months from the date of sale, repair or replace any part of the equipment determined by Graco to be defective. This warranty applies only when the equipment is installed, operated and maintained in accordance with Graco's written recommendations.

This warranty does not cover, and Graco shall not be liable for general wear and tear, or any malfunction, damage or wear caused by faulty installation, misapplication, abrasion, corrosion, inadequate or improper maintenance, negligence, accident, tampering, or substitution of non-Graco component parts. Nor shall Graco be liable for malfunction, damage or wear caused by the incompatibility of Graco equipment with structures, accessories, equipment or materials not supplied by Graco, or the improper design, manufacture, installation, operation or maintenance of structures, accessories, equipment or materials not supplied by Graco.

This warranty is conditioned upon the prepaid return of the equipment claimed to be defective to an authorized Graco distributor for verification of the claimed defect. If the claimed defect is verified, Graco will repair or replace free of charge any defective parts. The equipment will be returned to the original purchaser transportation prepaid. If inspection of the equipment does not disclose any defect in material or workmanship, repairs will be made at a reasonable charge, which charges may include the costs of parts, labor, and transportation.

**THIS WARRANTY IS EXCLUSIVE, AND IS IN LIEU OF ANY OTHER WARRANTIES, EXPRESS OR IMPLIED, INCLUDING BUT NOT LIMITED TO WARRANTY OF MERCHANTABILITY OR WARRANTY OF FITNESS FOR A PARTICULAR PURPOSE.**

Graco's sole obligation and buyer's sole remedy for any breach of warranty shall be as set forth above. The buyer agrees that no other remedy (including, but not limited to, incidental or consequential damages for lost profits, lost sales, injury to person or property, or any other incidental or consequential loss) shall be available. Any action for breach of warranty must be brought within two (2) years of the date of sale.

Graco makes no warranty, and disclaims all implied warranties of merchantability and fitness for a particular purpose in connection with accessories, equipment, materials or components sold but not manufactured by Graco. These items sold, but not manufactured by Graco (such as electric motors, switches, hose, etc.), are subject to the warranty, if any, of their manufacturer. Graco will provide purchaser with reasonable assistance in making any claim for breach of these warranties.

In no event will Graco be liable for indirect, incidental, special or consequential damages resulting from Graco supplying equipment hereunder, or the furnishing, performance, or use of any products or other goods sold hereto, whether due to a breach of contract, breach of warranty, the negligence of Graco, or otherwise.

**FOR GRACO CANADA CUSTOMERS**
The parties acknowledge that they have required that the present document, as well as all documents, notices and legal proceedings entered into, given or instituted pursuant hereto or relating directly or indirectly hereto, be drawn up in English. Les parties reconnaissent avoir convenu que la rédaction du présente document sera en Anglais, ainsi que tous documents, avis et procédures judiciaires exécutés, donnés ou intentés à la suite de ou en rapport, directement ou indirectement, avec les procedures concernées.

# Graco Information

For the latest information about Graco products, visit www.graco.com.

***TO PLACE AN ORDER***, contact your Graco distributor or call to identify the distributor closest to you:
**Phone:** 612-623-6921 or **Toll Free:** 1-800-328-0211 **Fax:** 612-378-3505

*All written and visual data contained in this document reflects the latest product information available at the time of publication. Graco reserves the right to make changes at any time without notice.*

*For patent information, see www.graco.com/patents.*

Original instructions. This manual contains English. MM 307517

**Graco Headquarters:** Minneapolis
**International Offices:** Belgium, China, Japan, Korea

**GRACO INC. AND SUBSIDIARIES • P.O. BOX 1441 • MINNEAPOLIS MN 55440-1441 • USA**
**Copyright 1982, Graco Inc. All Graco manufacturing locations are registered to ISO 9001.**

www.graco.com
Revised June 2014